396-3050Y1

SureFire Ag Systems

NutriSphere-N®

Nitrogen Fertilizer Manager

VERDESIAN

SureFire *Catalyst* Electric Pump System for NutriSphere-N® NH3 & Commander II

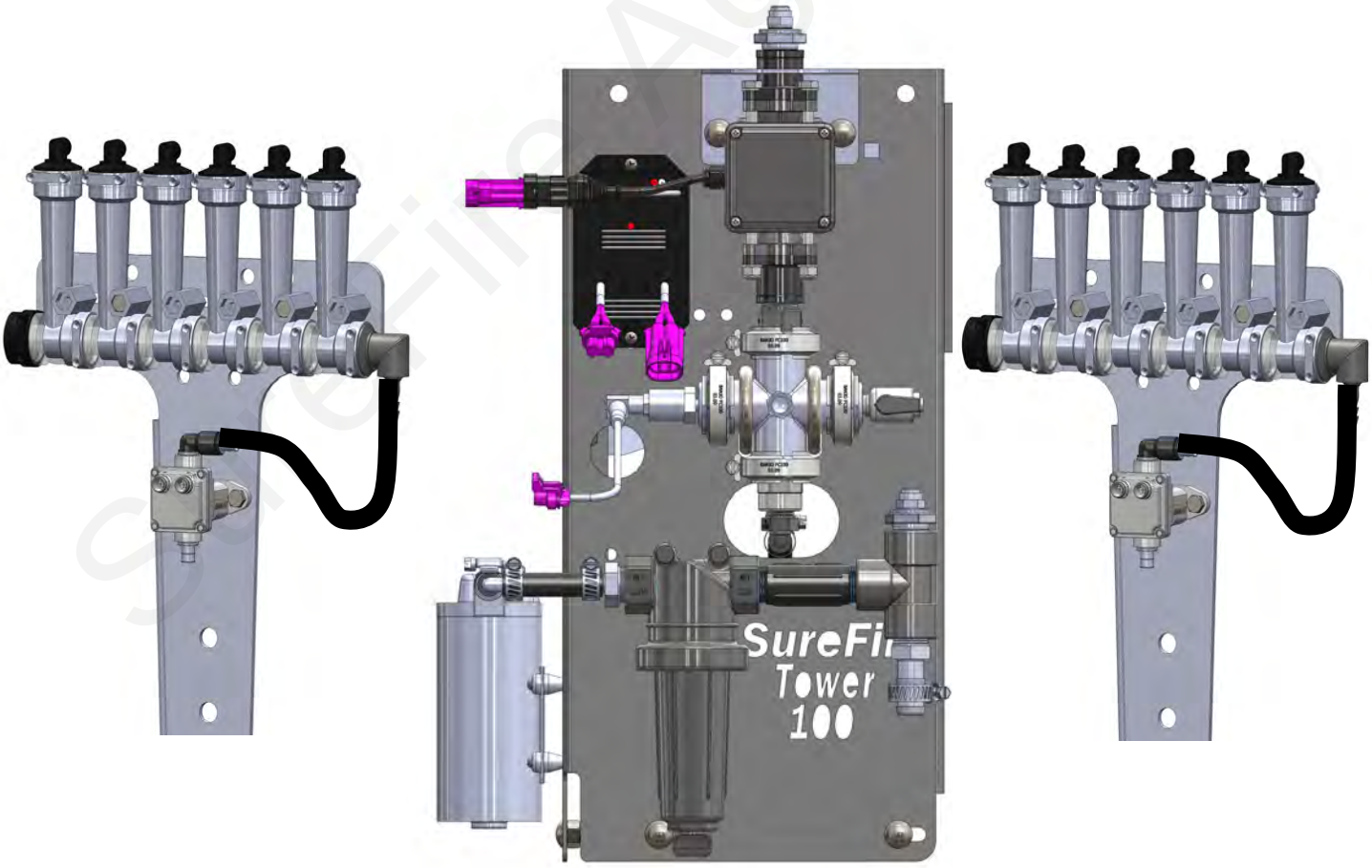

Table Of Contents

Introduction

A Introduction

Components - Liquid

B Components Liquid

Components - Wiring & Electrical

D Components Wiring & Elec.

Installation Overview

E Installation

Setup & Operation

F Setup &

Troubleshooting

G Trouble-

Maintenance & Parts

H Maintenance

Read Me First

The SureFire Tower 100 system is designed to give accurate and even row-to-row distribution of NutriSphere-N NH3 at a normal rate of 32 oz/acre. It has the capacity to deliver higher rates if desired.

Note: Ounces/acre, not gallons/acre.

On the Commander II control system, the flowmeter will be calibrated to measure this product in ounces, not in gallons. Most displays are programmed to show gallons, so be aware that the numbers that show for this product will actually be in ounces.

Ounces per acre means a very small amount of liquid is being pumped and distributed. At 6 mph on 30" row spacing, a rate of 32 oz/acre means that each row has a flow of just under 1 oz/min. On a 12-row implement, the total amount being pumped, therefore, is less than 12 oz/min. The SureFire *Catalyst*™ system is engineered to accurately and evenly distribute this flow.

Low Flow Electromagnetic Flowmeter

The SureFire *Catalyst*™ system utilizes an electromagnetic flowmeter (with no moving parts) that is designed and built to accurately measure flows down to 10 oz/min. SureFire has proven the reliability and accuracy of the electromagnetic flowmeter by years of use in the field with thousands of flowmeters.

Dual Metering Tube Distribution

The low flow to each row will be evenly distributed through metering tubes that have an opening of 0.080" in diameter. An orifice that could distribute this flow would be 0.015" or less in diameter. An orifice of that size is easy to plug. The 4 to 5 times larger diameter of the tube greatly reduces the risks of plugging.

The use of two tubes to each row (dual tube system) means that this system has the ability to handle a wide variation of rates and speeds (from 5 to 10 mph) and to do this under a wide range of temperature changes where the viscosity of the product changes.

Flow Indicators

The flow for each row will pass through a flow indicator that has one or two balls that will float to indicate flow to that row. This will give an immediate visual indication of flow to each row. While the flow indicators give a good indication of the flow to each row, they are not always an indicator of the exact flow to each row. Only a catch test will verify the evenness of the row-to-row distribution.

Tool Box

Each Tower 100 system comes with a built-in tool box that contains mission-critical spare parts to reduce equipment downtime.

Product Tank

The Tower 100 comes with either a 55 gallon or a 110 gallon tank. The large tank would allow over 400 acres of application at the 32 oz/acre rate.

Rinse Tank

Each system comes with a 3-gallon rinse tank that can be filled with RV anti-freeze to allow the system to be flushed when it will not be used for a few days and to be protected from freezing after the rinse.

Electric Section Valves

Implements that are 60' wide or wider can be split into 2 sections to allow section control. Standard single section setups are equipped with electric row-shutoff valves on each flow indicator manifold set that will allow the pump to continue running when application stops at the end of the field to allow for a quicker return to Target Rate when application resumes. Two-section systems will have the same manifold shutoff valves but can be configured so the valves on the left half of the implement will function as Section 1 and the valves on the right half as Section 2.

Getting Started

A
Introduction

This manual contains the information for the SureFire Tower 100 *Catalyst*™ system for NutriSphere-N NH3 that is being controlled by the SureFire Commander II controller.

Changes to components or configuration settings may be made to improve the operation of the system.

Go to Section F for the instructions on setting up your display.

General Information

You have purchased a SureFire NutriSphere NH3 application system for your equipment. This system can be controlled by:

- John Deere Rate Controller
- SureFire Commander II controller
- Ag Leader Liquid Product Control Module
- Trimble Field-IQ Rate and Section Control Module
- Case IH Pro 700 with AccuControl

Note: SureFire Ag Systems also has the SureFire Torpedo system, a complete anhydrous ammonia application system. See www.surefireag.com for more information.

Basic Installation Steps

1. When controlling the NutriSphere N-NH3 application with the Commander II, you will need to control the anhydrous application with another controller or another Commander II.
2. Open the packages and familiarize yourself with the components. See the System Overview Examples on the following pages to see the big picture of how SureFire Systems are installed. Refer to manual sections B & D for component information.
3. Mount the Tower and tank on your equipment.
4. Install the plumbing kit including flow indicator columns, electric ZIP valves, and metering tube plumbing to each row unit delivery point. See sections B & E for information on these components.
5. Attach harnesses as shown in Section D.
6. Setup Controller for SureFire system as shown in Section F. ***See page 24 for a chart of important setup items that must be entered into the Commander II before use.***
7. Fill system with water, conduct initial operation and tests per Section F.
8. Winterize system with RV Antifreeze if freezing temperatures are expected.

System Overview - Example 1

The following gives a layout of the SureFire Tower 100 system with these components:

- Commander II Controller display in cab
- Tower 100
- Flow Indicators with ZIP valve
- Astro II GPS Speed Sensor

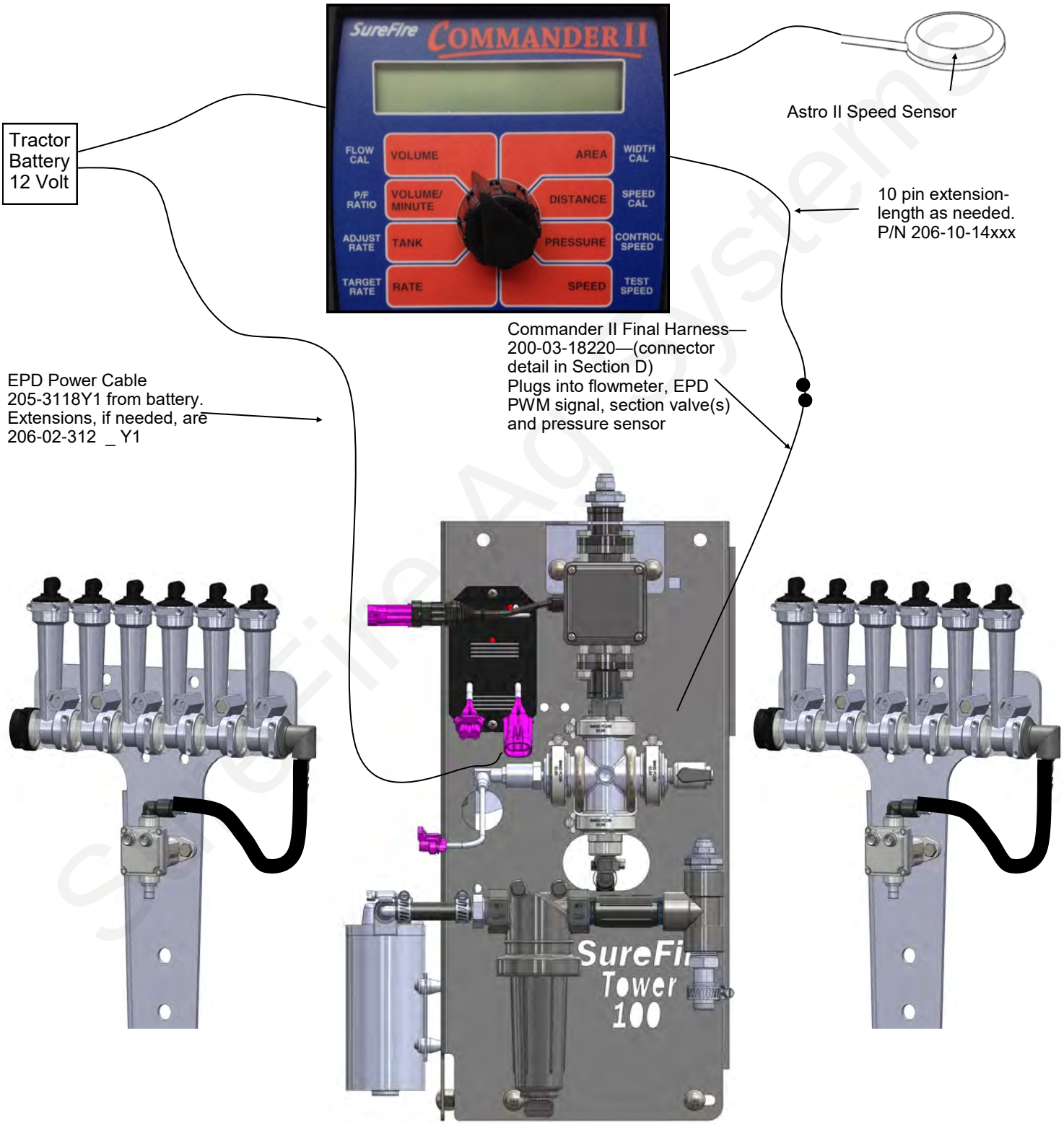

Electromagnetic Flowmeter
204-01-4621CUF05
0.08 to 1.6 GPM (10 oz/min to 1.6 GPM)

The flowmeter will read accurately down to 8 oz/min. Readings may go in and out below that.

B
Components
Liquid

Mounting Bracket,
Used in Tower 100
410-2106Y1-BK

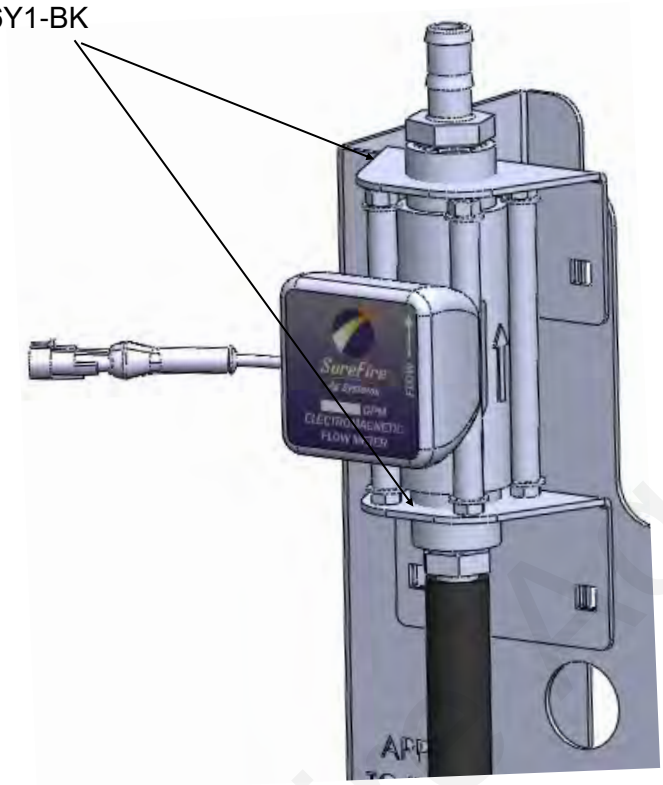

Electromagnetic flowmeters are superior to traditional turbine flowmeters in two basic ways. First, they have no moving parts. This translates into no wear items or potential for contaminants to jam a spinning turbine.

Second, electromagnetic flowmeters detect the flow by electrically measuring the velocity of the liquid, which makes them independent of viscosity or density of the fluid measured. They are extremely accurate using the standard calibration number. SureFire still recommends you perform a catch test to verify the system is properly installed and configured.

This flowmeter is rated down to 10 oz/min, but will accurately measure flows down to 8 oz/min. Below that rate, the flowmeter may not give a continuous pulse output.

The flowmeter for this setup will be calibrated to read in ounces, not gallons. The display may say gallons, but it will be measuring in ounces.

Caution: Before welding on the implement, disconnect the flowmeter or damage to the flowmeter electronics may occur.

Do not power wash the flowmeter. High pressure spray directed at the back edge of the face plate or at the wire connector may allow water into the flowmeter electronics.

Section Valves and Flow Indicator Manifold Shutoff Valves
ZIP Valves

B
Components
Liquid

ZIP valve on right shown with both electrical connectors plugged (if daisy-chaining from one to the next). Outlets can be plumbed with a variety of fittings depending on the particular scenario.

Flow Indicator Manifold Shutoff Valves

Single-section systems will have electric shutoff valves (ZIP Valves) on each bank of flow indicators. These valves will be controlled by the Section 1 Connector. A 4' Y Adapter Cable (201-215604) will be plugged into the Section 1 connector on the Pump harness (200-03-18220). One end of the Y will connect to the valves on the left side of the machine, the other end of the Y will connect to the valves on the right side of the machine.

Section Control

Some systems (60 ft. and wider) may be set up as 2-section implements, so half of the applicator can be shut off in an overlap situation.

These systems will still have the flow indicator shutoff valves, but the valves on the left half of the machine will be plugged into the Section 1 connector on the harness and the valves on the right half of the machine will be plugged into the Section 2 connector.

Implements less than 60 feet wide need to be configured as one section for the NutriSphere N-NH3 product, since the output for narrower sections will drop below the range of the flowmeter at lower speeds.

3-Pin Wiring Connector:
Pin A—Red, 12 Volts +
Pin B—Black, Ground -
Pin C—White, Signal
12V=on ; 0V=off

Pressure Sensor

The Tower 100 comes equipped with a 100 psi pressure sensor to work with your controller. This sensor for the Commander II controller is a 2-wire type sensor. All other controllers use a 3-wire sensor. The sensor has a 1/4” MPT fitting.

Pressure Sensor with harness 521-05-050100

Your display will show the system pressure on the in cab screen. **The pressure reading is only for informational purposes and is NOT used in the flow control process.** Flow control uses the flowmeter feedback only.

The pressure sensor is very helpful to optimize system performance and troubleshoot any issues.

The pressure transducer is factory calibrated and will display a very accurate pressure reading on your display. No manual gauge is required.

When attaching connector to pressure sensor, make sure pins are aligned so they are not bent.

Pump Priming and Air Bleed Valve

An air bleed valve is included with each pump to aid in system priming. It is shipped in the pump accessories bag and must be installed during system installation.

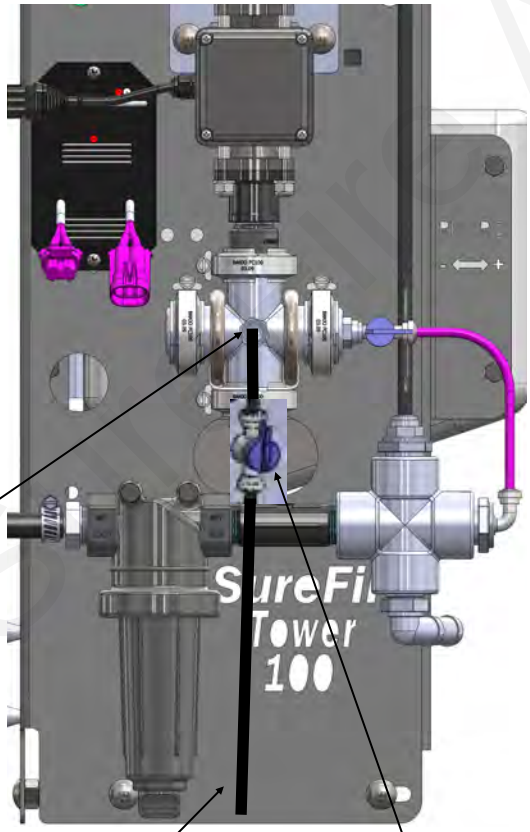

Shipped from factory with plug installed.

1/4” Tubing

1/4” air bleed valve

Why use an air bleed valve:
Your system is equipped with a 4 lb. check valve on each metering tube. These valves do not let air escape from the system unless it is pressurized. 12 volt liquid pumps are not good air compressors. Therefore, the pump can struggle to prime due to air trapped on the outlet side of the pump.

The air bleed valve is a small 1/4” valve that when opened lets air escape from the pump outlet at zero pressure. Open until liquid comes out and then close the valve.

How to install the air bleed valve:
Remove the 1/4” plug from the quick connect fitting on the center cross on the Tower (see picture). Next, insert the 1/4” tubing in the quick connect fitting. Run the 1/4” tubing to an easily accessible spot on your equipment. Next, cut the tubing and push the 1/4” valve onto the tubing. Finally, run the tubing to a low location where any product that escapes will run on the ground.

Be sure the air bleed valve tube does not become plugged with dirt or it will not allow air to bleed.

Product Distribution

B
Components
Liquid

<u>To assure proper and even distribution to each row, the product being applied must be metered to each individual row.</u> This metering is done by using metering tubes which create back pressure so an equal amount of liquid is applied to each row.

Floating Ball Flow Indicator & Manifold System

Flow indicators give a clear visual signal that a fertilizer system is working. These indicators use an o-ring and wire clip connection to snap together in any configuration necessary.
The flow for each row will pass through a flow indicator that has one or two balls that will float to indicate flow to that row. This will give an immediate visual indication of flow to each row. While the flow indicators give a good indication of the flow to each row, they are not always an indicator of the exact flow to each row. Only a catch test will verify the evenness of the row-to-row distribution.

For most applications of NutriSphere-N NH3 at 32 oz/acre, the Green Plastic ball gives a good flow indication. If a heavier ball is needed, use the Red ball.
On this low-flow system, the flow appears to be more stable if only one ball is used.

Parts List

Complete Columns

701-20460-920-GR-V	Single Low Flow Column with 1/4" QC - 90 Degree Outlet

Fittings

701-20516-00	ORS x 1/4" QC - 90 Degree
701-20521-00	Wilger End Cap
701-20523-00	ORS Male x ORS Female x 3/8" FPT - Isolator
701-20525-00	ORS Male x ORS Male x 1" FPT - Tee

Service Parts Only

701-20470-00	Low Flow Column
701-20460-04	Wilger Lock U-clip
701-20460-05	Flow Indicator Ball - 1/2" SS Ball
701-20460-06	Flow Indicator Ball - Maroon Glass
701-20460-07	Flow Indicator Ball - Red Celcon
701-20460-08	Flow Indicator Ball - Green Poly
701-20460-09	Flow Indicator Ball - Black Poly
701-20460-15	Viton O-Ring for column & fittings
701-40225-05	Viton O-Ring for Orifice

Brackets & U-Bolts

400-1037A1	3-6 Row Bracket
400-1036A2	7-12 Row Bracket
400-2011A1	White Backer Plate for 3-6 Row Bracket
400-2010A1	White Backer Plate for 7-12 Row Bracket
400-1315A2	Flow Indicator Bracket, 6-8 in wide hitch mount

Flow Indicators and Dual Check Valves

B
Components
Liquid

Some systems may have a dual check valve system with two metering tubes as shown at the right. On this system, flow can be directed to the small tube, or to the large tube, or to both tubes by opening or closing the valves by twisting the blue caps.

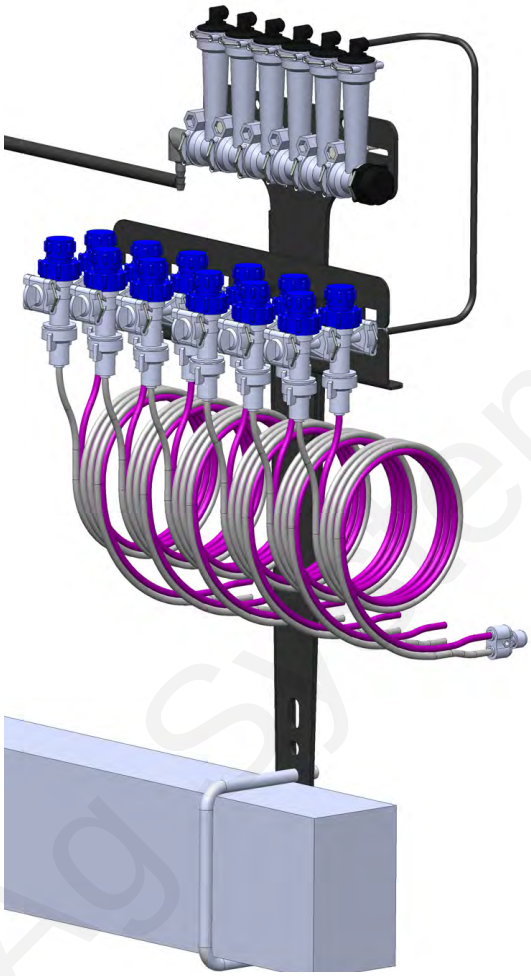

Ball retainer—If top is removed, be sure that the ball retainer is in place when top is reinstalled.

Assembly of top of flow indicator tube

Low Flow Column (mostly 1/4” QC)

The low flow column has a smaller internal diameter. This means a heavier ball can be used to monitor a smaller flow.

Externally, the low flow column can only be identified by “Low Flow” molded into one side of the column. All the same fittings work with low flow and full flow columns.

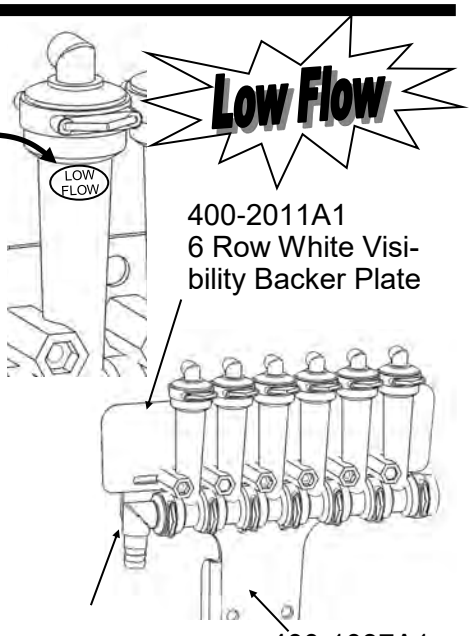

400-2011A1
6 Row White Visibility Backer Plate

400-1037A1
3-6 Row Bracket

Floating Balls

For most applications of NutriSphere-N NH3 at 32 oz/acre, the Green Plastic ball gives a good flow indication. If a heavier ball is needed, use the Red ball.
On this low-flow system, the flow appears to be more stable if only one ball is used.

Metering Tube Plumbing Kits

B
Components
Liquid

The SureFire *Catalyst* Tower 100 NutriSphere-N NH3 system comes with a dual metering tube distribution system. These plumbing kits will contain everything you need to distribute product from the flowmeter outlet down to the ground application device.

For most applications of NutriSphere-N NH3 at 32 oz/acre on 30” rows, the purple tube will be the tube that is used. When applying in cold weather and/or at high speeds, it may be necessary to use the blue tube. The system will work at pressures up to 50 PSI, but for prolonged use above 45 PSI, consider switching to a larger tube.

Dual Advantage of Dual Metering Tube

Metering tube provides a larger passage way diameter than a comparable orifice. Typical NutriSphere-N NH3 applications apply around 1 to 1.5 oz/min/row. An orifice for this rate would have a 0.015” diameter opening. The SureFire system uses metering tubes with diameters of 0.080” (Purple) and 0.096” (Blue). This 12’ tube with more than three times the diameter creates a system resistant to plugging while providing excellent row to row distribution.
By using two metering tubes, the system can provide the proper system pressure as the product properties change due to temperature, mixtures and other factors.

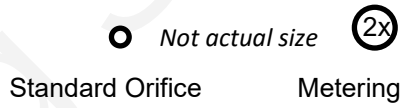

Field Operation of Dual Metering Tube

The best tube to use may change, based on temperature, application speed, and product batch,

SureFire recommends you start with the Purple tube (for typical 32 oz/ac and 30” row spacing). Conduct a test using the Nozzle Flow Check to determine your system pressure. Recommended pressure is between 10-40 PSI.

The system will operate up to 50 PSI. If prolonged application with pressures above 45 PSI is anticipated, consider changing to the blue tube.

Note: Flow tests with water will have very different pressure readings than what the system will have with NutriSphere-N. The pressure will be much less with water for a given flow than with NutriSphere-N.

Typical plumbing setup

Your shanks and plumbing setup may vary from those shown here.

The 4' green tube delivers the product to the shank.

1. Slide a 2' piece of 3/8" hose over the green tube along with 2 clamps.
2. Slide the green hose in the tube on the shank as far as it will go.
3. Slide the 3/8" hose down over the tube. Clamp 3/8" hose at the top and at the bottom.
4. Connect purple tube to green tube with 1/4" QC x 1/4" QC. Cap both ends of the blue tube. Blue tube will be used when cold weather and/or high speeds create too high pressure in purple tube.
5. Connect purple tube to appropriate length of black tube with 1/3 lb 1/4" QC check valve. Connect this black tube to top of flow indicator.

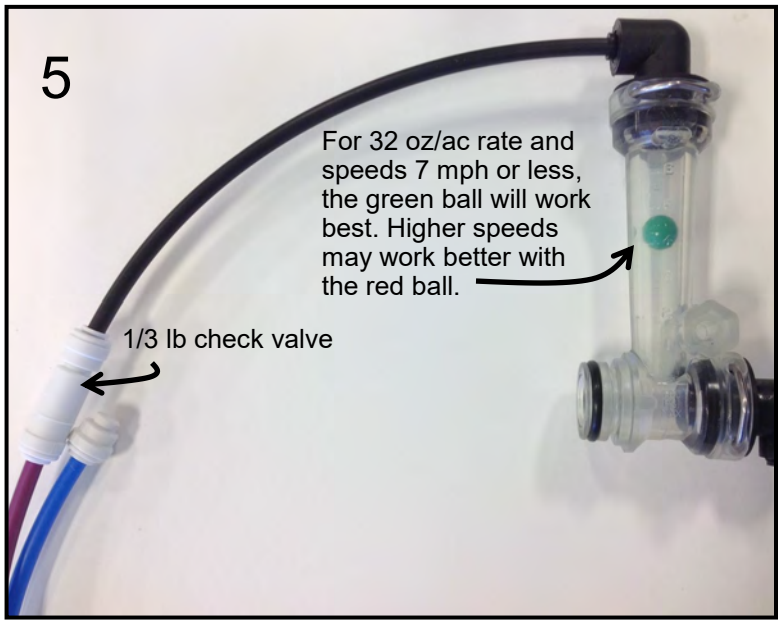

Shanks and Knife Points available from SureFire Ag Systems

SureFire Ag Systems and Verdesian have worked closely with an established shank manufacturer to develop a shank and two knife points that will deliver the anhydrous ammonia and NutriSphere-N NH3 where it needs to go. They will be able to advise users on the best setup for their application scenario.

The knife on the left is for no-till conditions. On the right is a less aggressive point for tilled soil.

Anhydrous tube

NutriSphere tube

Insert a piece of 1/4” tube inside the NutriSphere tube and push it down so the end of the tube is at the top of the outlet hole. (See instructions on previous page.)
To protect the 1/4” tube, slide a 2-foot long piece of 3/8” hose over the tube and clamp this hose to the top of the NutriSphere tube.

Your application setup may be different. Generally, insert the green1/4” tube into the tube through which the NutriSphere-N NH3 will be applied.

Toolbox (no tools, just spare parts)

A toolbox containing critical items will be included with each system. The toolbox will contain:

QTY	
1	12 volt electric pump
2	flow indicator columns
10	size 6 hose clamps
1	3/8” HB 90 degree electric pump fitting
1	3/8” HB straight electric pump fitting
2	40 Amp fuses
1	1” Tee Strainer gasket-FKM
2	Clips for electric pump
4	QC 1/4” End Stop White Poly Cap
6	QC to QC—1/4” QC x 1/4” QC
2	Check Valve—1/3 lb—1/4” QC x 1/4” QC

Commander II Controller Setup & Operation

Tower & Commander II Layout #1

Control: PWM EPD

Mercury Switch: Installed on Implement
Speed Source: Astro GPS

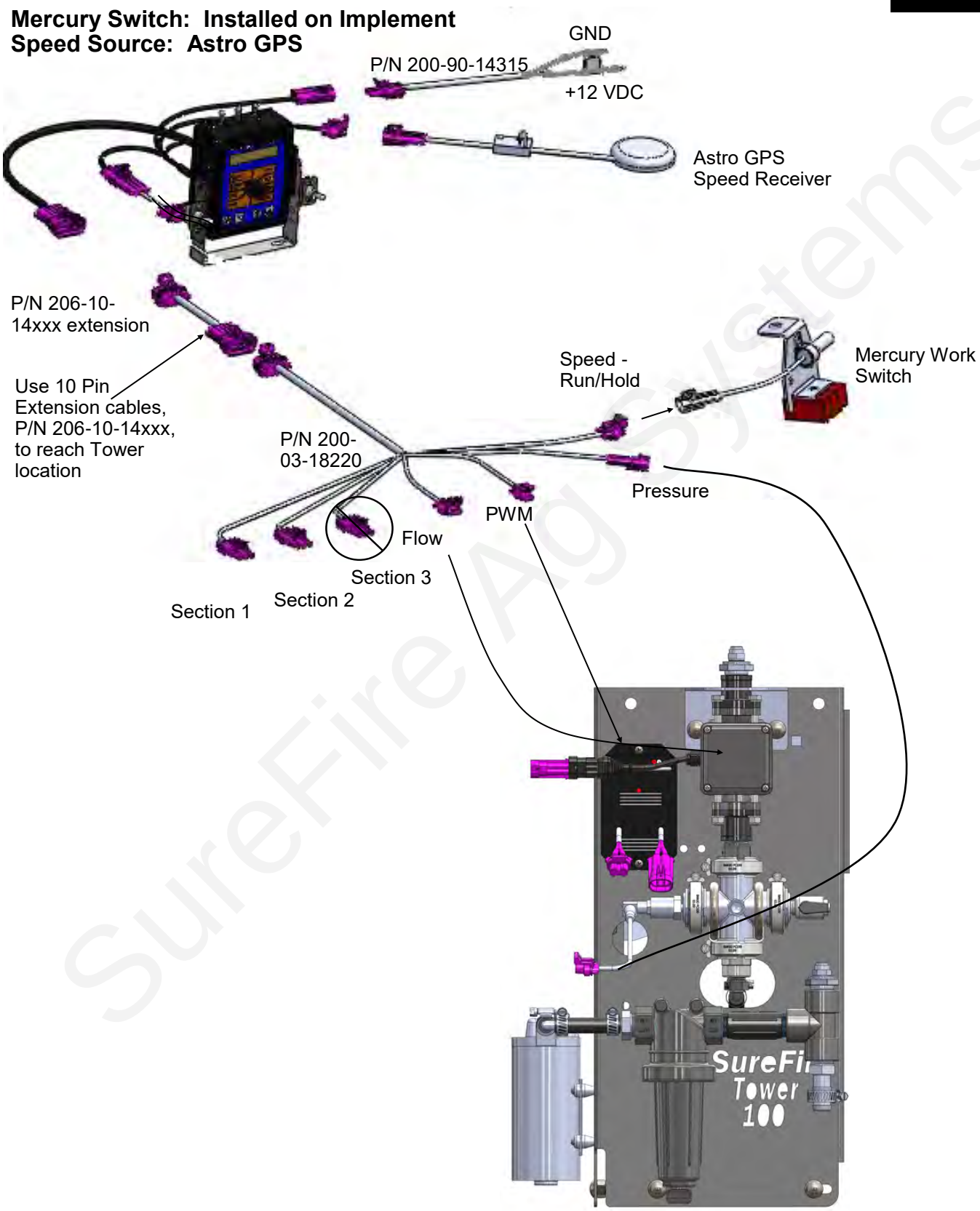

Tower & Commander II Schematic

Control: PWM EPD
Mercury Switch: Installed on Implement
Speed Source: Astro GPS

D
Wiring & Elec.

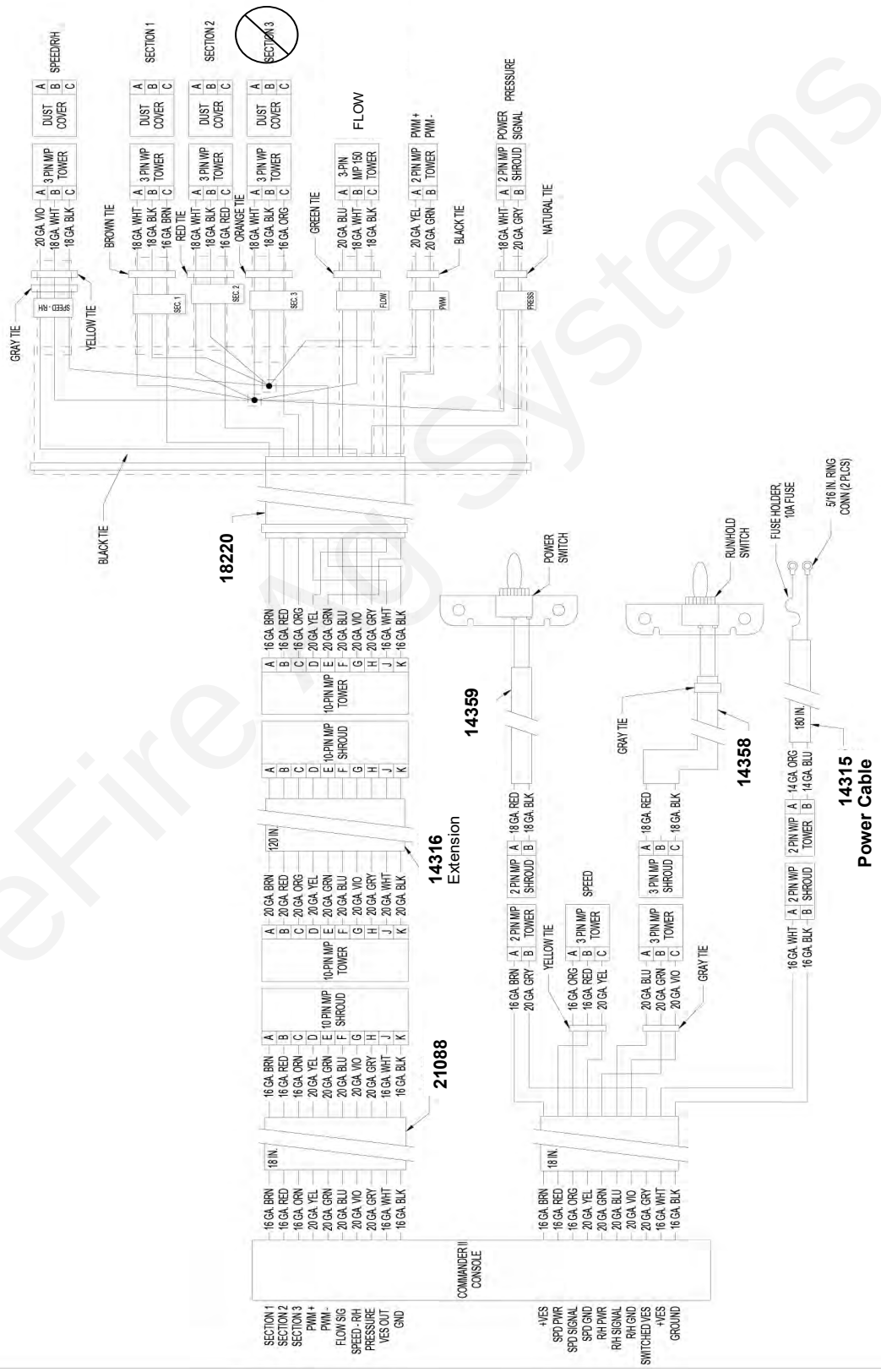

Means connector not used in this configuration.

Mercury Run/Hold Switch for Commander II

The Mercury Run/Hold Switch turns liquid application on and off automatically when the implement is raised or lowered. The switch is mounted on a component that rotates when the implement is raised and lowered. The switch is attached to a magnetic base for easy mounting to any metal part of your tractor hitch or implement.

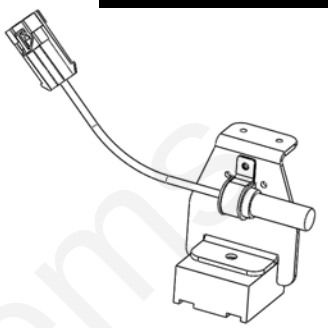

For mounted 3-point equipment:

- Mount the switch on the tractor 3 point arms.
- See the pictures below for switch orientation in run and hold positions.
- Use the 18048 "Y' Run/Hold adapter (included in box with Commander II controller) to plug the switch in at the back of the Commander II controller.

For hitch drawn implements:

- Mount the switch on a wheel frame that rotates as it lifts the wheels up and down to raise and lower the implement.
- See the pictures below for switch orientation in run and hold positions.
- Connect the switch to the Commander II Final Harness (200-03-18220). See Layout #1 showing this wiring connection.

Commander II Run/Hold Switch Logic

How to Adjust:

<u>If your controller is turning off product application before or after you want, tilt the switch</u>. If it turns off after you want when lifting the implement, tip more to the HOLD position. If product application should begin sooner when you lower the implement, tip more to the RUN position.

You can adjust the switch by moving the magnet or by loosing the screw and rotating the mercury switch.

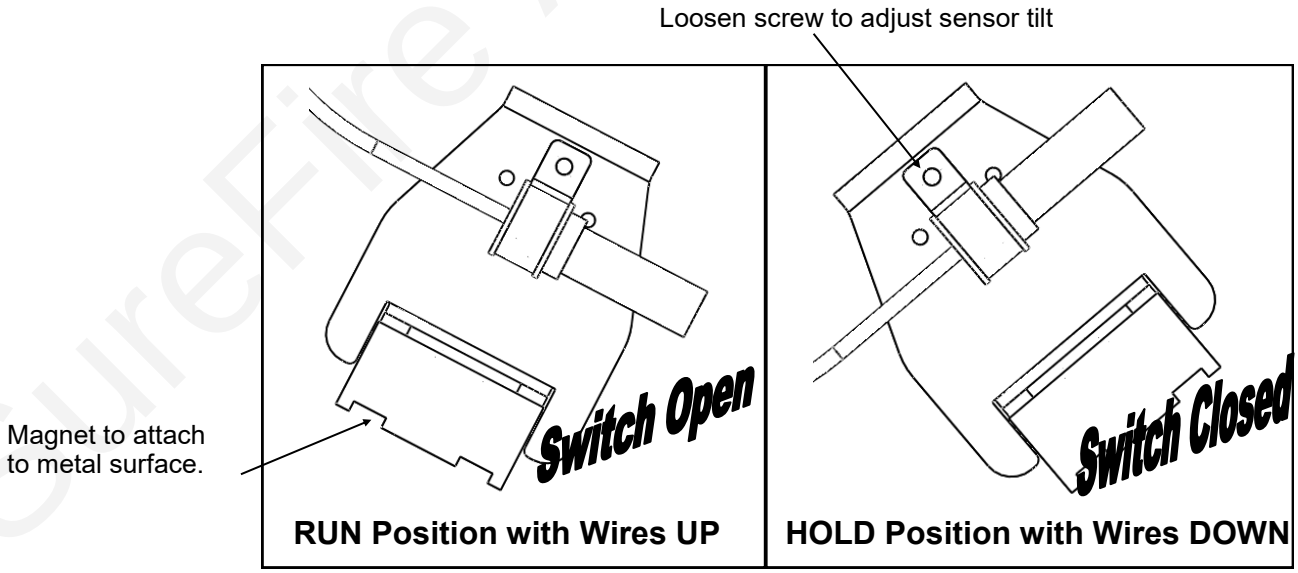

How to Test:

To test the run / hold mercury switch you will need a volt meter. Set the meter to test continuity (or ohms). With the wires down, you should have continuity between the two pins in the connector. With the wires up, the switch should be open (no continuity).

Astro GPS Speed Sensor

The Astro GPS Speed Sensor is the simplest speed sensor to use with the SureFire Commander II Controller. The GPS receiver uses the GPS satellites to track only speed. The output from Astro is a pulse to communicate speed to the Commander II.

PN 203-01-01410 Astro 2, 2 Hz GPS Receiver (most common with Commander II)
PN 203-01-01425 Astro 5, 5 Hz GPS Reciever

Speed Calibration for Commander II: 0.189
Astro Minimum Operating Speed: 1.0 MPH

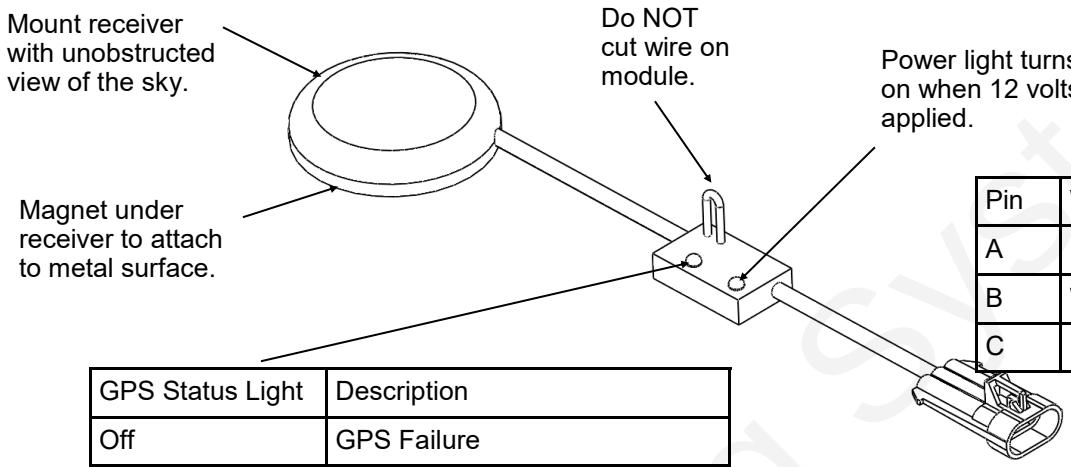

Pin	Wire Color	Function
A	Red	Signal
B	White	+ 12 V Constant
C	Black	Ground

GPS Status Light	Description
Off	GPS Failure
Blinking	Acquiring GPS satellites
On	GPS signal acquired

40 Amp PWM EPD
(Pulse Width Modulated Electric Pump Driver)
Item Number: 205-19024 with Anderson connectors
Replaces 205-18385 with 480 connectors

D
Wiring & Elec.

The Electric Pump Driver powers the electric pump by providing a pulse width modulated signal to control pump speed. It needs to have a power connection and wiring capable of carrying up to 40 amps of current. **It must be connected directly to the tractor battery**. SureFire recommends 10 gauge (or heavier) wire if extending harnesses in the field.

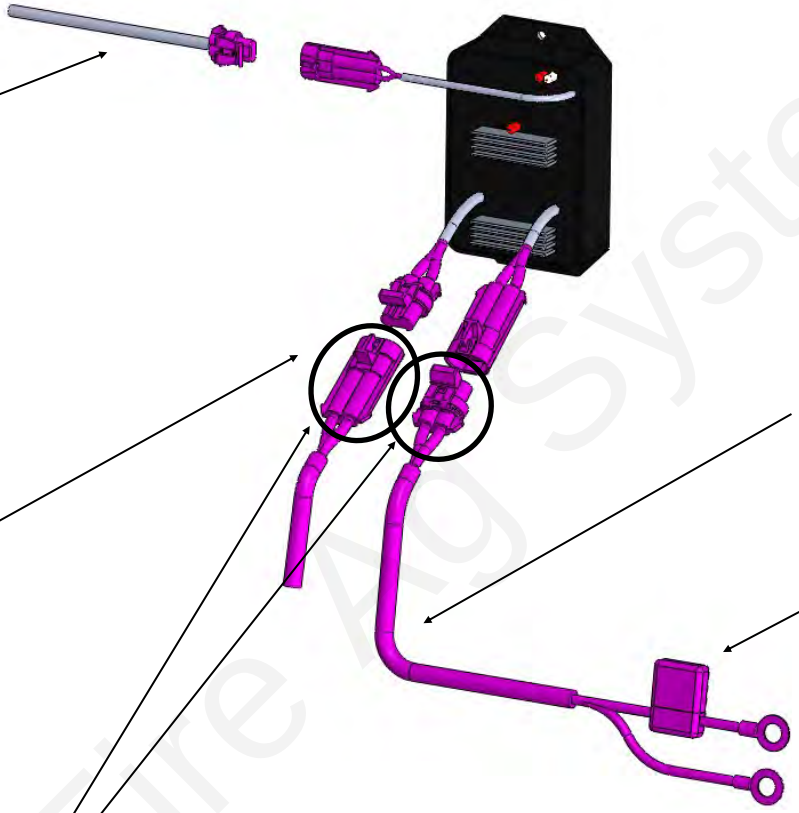

Troubleshooting Tip:
If the pump won't run, connect the power and pump connector directly together to give pump full 12 volts directly from battery. This will tell you if the pump is the problem or if something else is wrong. The pump will be running at full speed, so don't leave it connected this way for long.

Use EPD **Power Harness Extensions** as needed
(These have Anderson Connedtors)

		Wire Size
206-02-3120Y1	1' Extension	10 gauge
206-02-3121Y1	5' Extension	10 gauge
206-02-3122Y1	10' Extension	8 gauge
206-02-3123Y1	20' Extension	8 gauge
206-02-3124Y1	30' Extension	30' and longer—6 gauge
206-02-3125Y1	40' Extension	
206-02-3126Y1	50' Extension	
206-02-3127Y1	60' Extension	
206-02-3128Y1	2' Anderson Ext w/ Power Switch-8 AWG	

SureFire recommends a single long extension harness as multiple connectors will reduce voltage, increase current and hurt performance of your electric pump system.

SureFire Catalyst Verdesian NS-N NH3 and John Deere—Harness hookup

Harnesses for your particular system may vary from the list here. Not all of these harnesses will be used on all systems.

205-3118Y1	Anderson 40 Amp Fused Power Harness (connect to battery)
206-02-312_Y1	Anderson Extension Cable (to extend harness from battery to Tower)
206-03-1_ _ _ _	3-pin Extension Cable
206-10-143_ _	10-pin Extension Cable
201-3130Y1	480 MP Tower x Anderson Adapter Cable—Connect EPD to pump
200-03-18220	Flow, PWM, Pressure, Boom Harness
201-215604	4' Y Adapter Cable—1 WP Shroud to 2 WP Tower To connect Boom 1 connector to Left side and right side Zip valves (On 1-section implement, all Zip Valves run from Boom 1 connector—this harness splits that harness to go the left side and to the right side of the implement)
201-3158Y1	Zip Valve WP Section Cable—Connect to Boom 1 or Y adapter from Boom 1 and then to Zip Valve (on 2-section implement could be Boom 2 to Zip Valve)
201-3161Y1	Zip Valve Termination Plug. Screw this onto open connectors on ZIP Valve.
201-3193Y1	Boom 1 WP connector to 2 Zip Valve MP12 connectors
201-3200Y1 to 3203Y1	Zip Valve to Zip Valve Connector cable (used if daisy-chaining Zip Valves)

Zip Valve Mounting

Picture at right shows ZIP Valve mounted on Flow Indicator Bracket.
Mount ZIP Valve to Flow Indicator Bracket with 1/4" bolts. Use washer and nylock nut.
Plumb flow from flowmeter into bottom of valve. From top of valve plumb to flow indicator with 3/8" hose.
Connect wiring harness to valve. Wiring harness connectors are keyed so they only fit on one of the connectors.

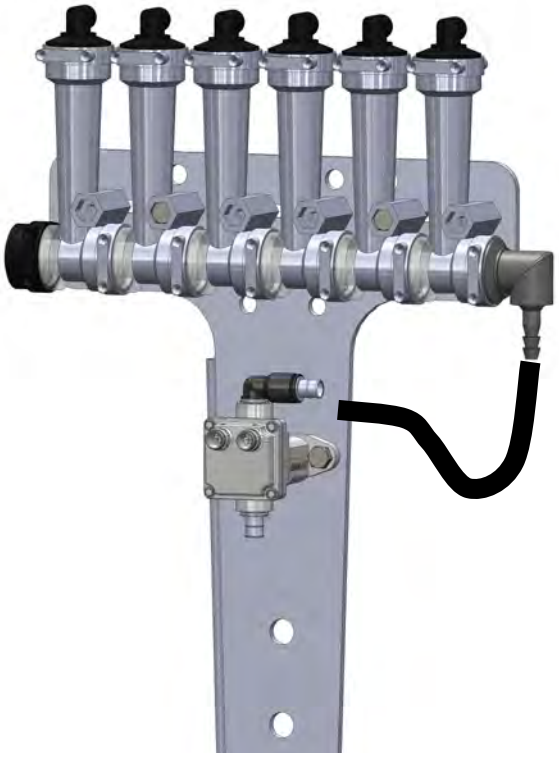

Tower 100 *Catalyst*™ Plumbing Overview & Valve Operation

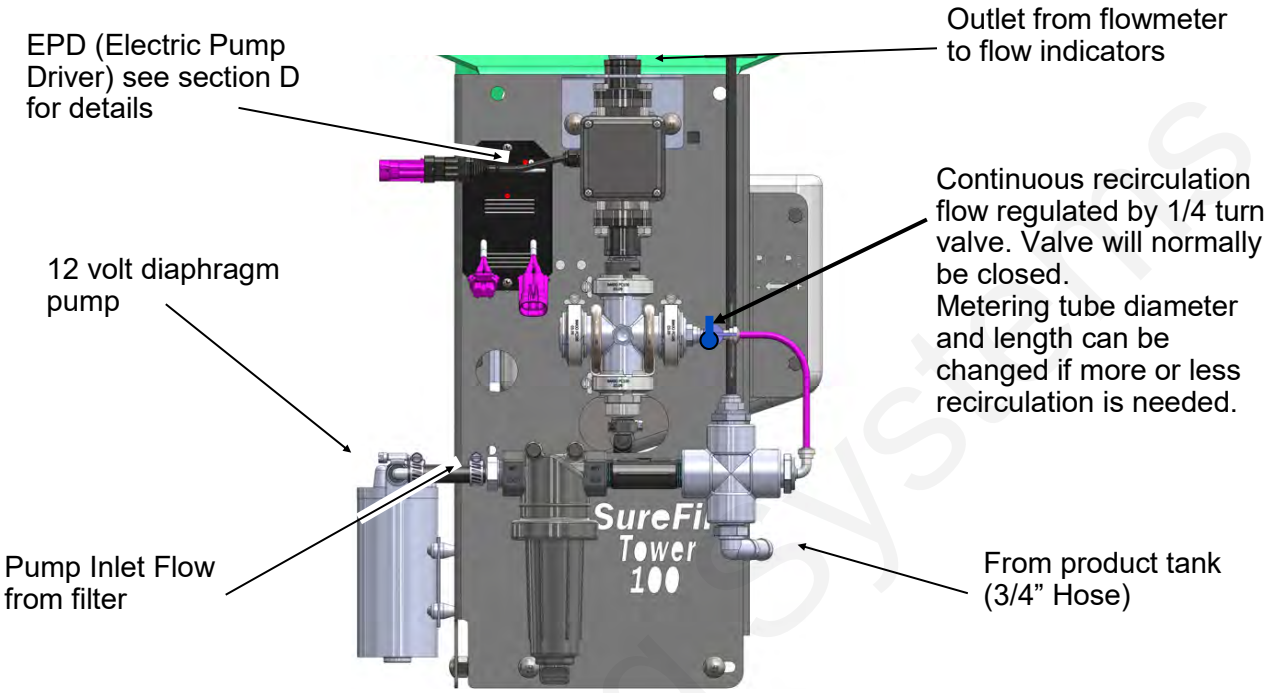

Do I need recirculation flow?

Recirculation flow allows the pump to run faster than if the total pump flow was applied to the ground. This may be helpful when operating at very low flow rates. This system will typically operate with the recirculation valve closed. The metering tube on the recirculation loop can be changed to allow for more or less recirculation. Too much recirculation can result in unstable flow to the rows.

Tower 100 *Catalyst* Plumbing Detail

(Bottom of Product Tank)

E
Installation Overview

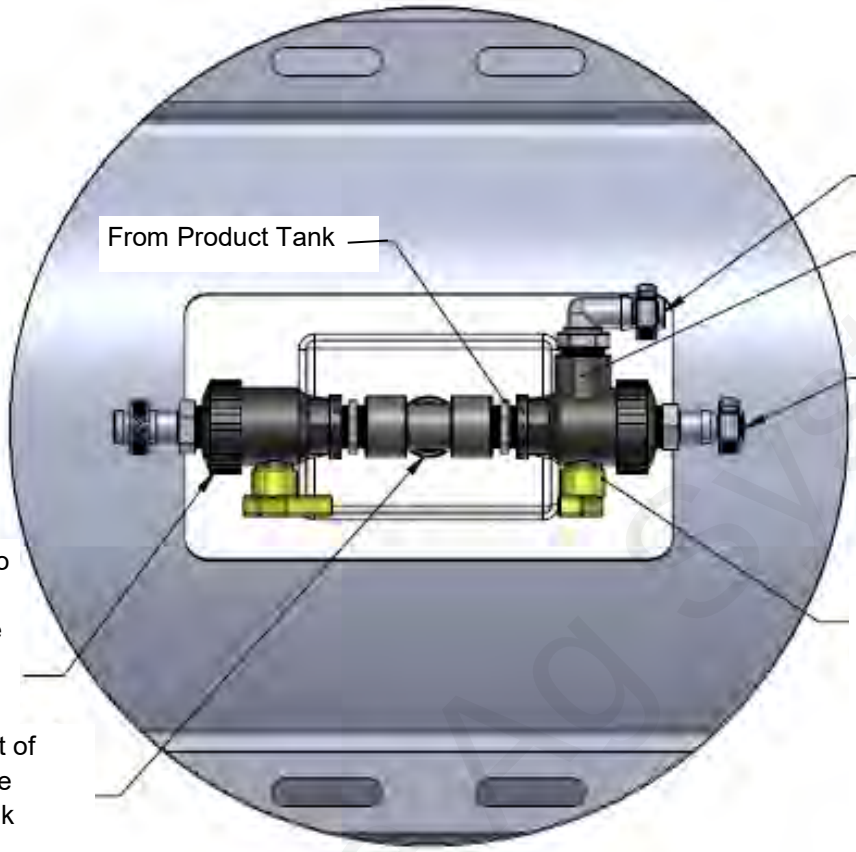

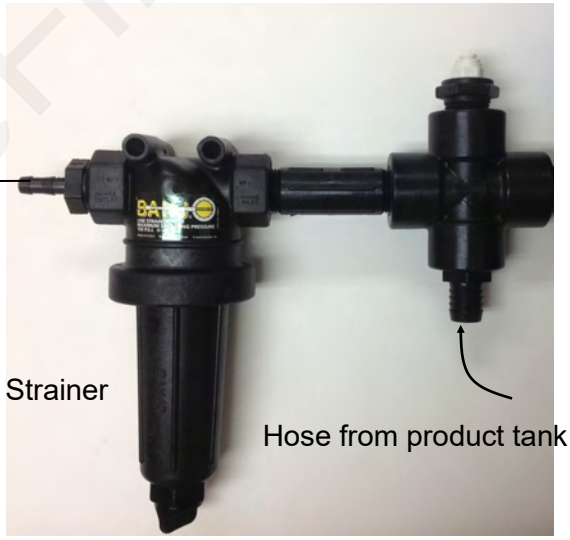

Tower 100 Mounting Options

Various brackets and u-bolts are available to provide a way to mount the Tower 100 to almost any implement.
Your SureFire configuration specialist will get your implement information at ordering time and make sure that all of the hardware needed for your system is included.

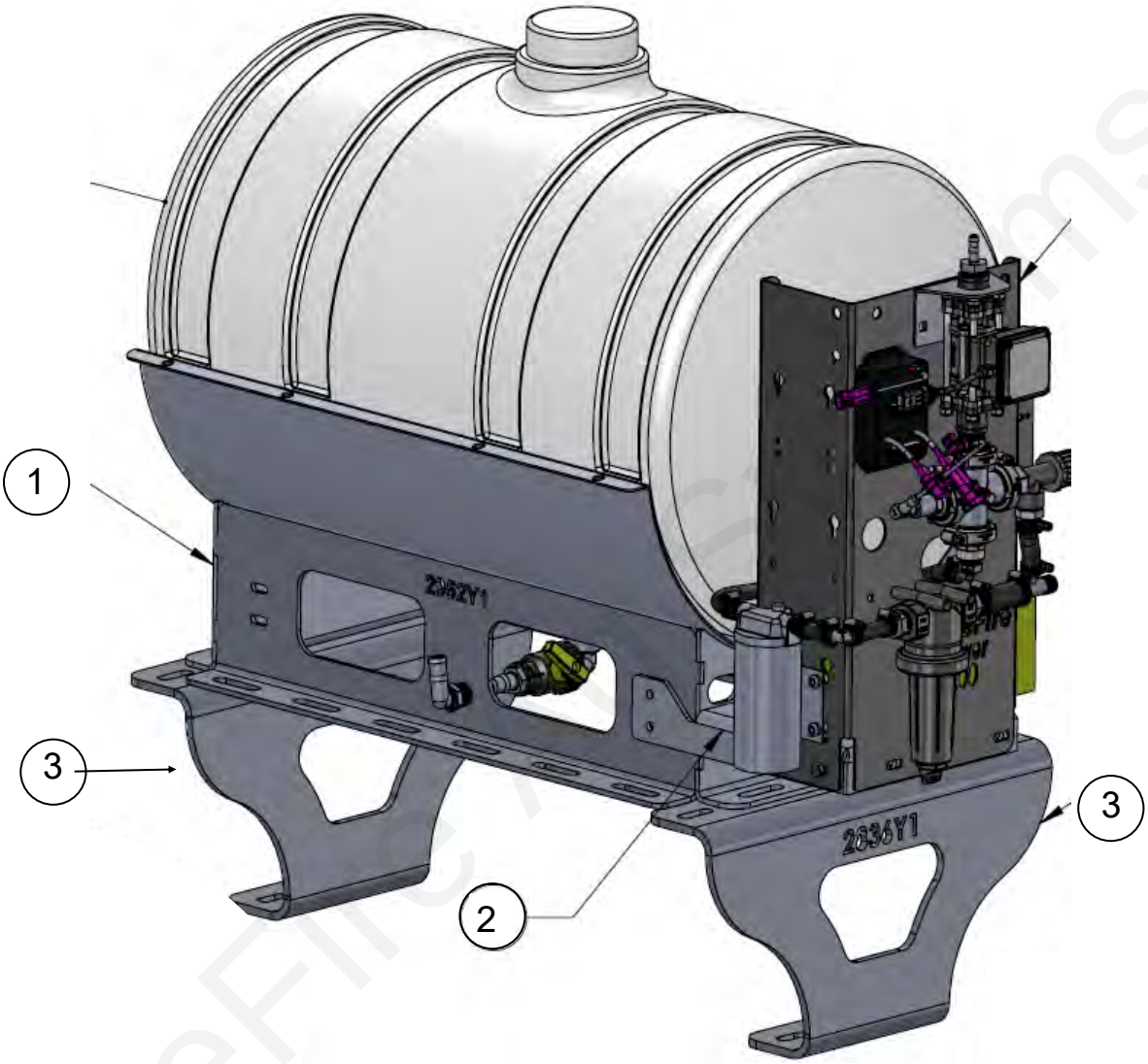

ITEM NO.	Part Number	Description	QTY
1	421-2952Y1	55 gal/24” DIA tank cradle	1
Or	421-2956Y1	110 gal tank cradle	1
2	420-2957Y1	Tower 100 Mount Bracket	1
3	420-2836Y1	Tank Stand (12” tall)	2
Or	420-2986Y1	Tank Stand (6” tall)	2

A variety of U-bolts are available to fit various sized bars.

Commander II Console Functions

The Commander II provides automatic rate control using PWM control. This controller features the same simple accessibility as its predecessor, yet adds new features that create a very robust controller.

In Field Operating Instructions

VOLUME: Displays total ounces of liquid applied. Can be reset to 0 by holding the reset button.

3 SECTION SWITCHES: Turns application on or for each section. If not dividing implement into sections, use Section 1 switch only.

AREA: Displays the area of coverage by the equipment in acres (hectares). May be reset.

DISTANCE: Displays the distance traveled in feet (meters). May be reset.

VOLUME/MINUTE: Displays ounces of liquid applied per minute. Use this to read instant flow in oz/min.

PRESSURE: Displays the liquid pressure at the location of the optional pressure sensor. In addition to displaying Pressure the console will warn the operator with HiPSI (High Pressure) message when the input pressure exceeds the limit pressure (set in Special Cal)

TANK: Displays ounces of liquid remaining

RATE: Displays application rate Will be set to display rate in ounces per acre

SPEED: Displays ground speed in miles per hour (Kilometers per hour).

RUN/HOLD: Turns liquid application on (RUN) or off (HOLD)

ON/OFF: Commander II power switch. When the console is turned on (except when starting in "SPECIAL" CALIBRATE) the data display will show the **Number of Hours** it has operated for one second, followed by the **Software Part Number (45124)** and the **Software Revision (rP X)** for 1.5 seconds each. Then it will display the **Control Mode (P-FLO or S-FLO)** for 1.5 seconds.

AUTO/MAN: Key which changes operation from automatic control to manual.

CAL: This key is used to enter & exit calibration mode.

RESET/ - : When not in CAL, clears the selected counter when held for two seconds.

+ & - : Plus & Minus keys are used to increase and decrease values

Five Steps for Commander II Setup for Tower Electric Pump Systems

1. **Commander II Special Cal Quick Setup**
2. **Standard Calibration**
3. **Initial Operation in Manual Mode**
4. **Test Speed Operation in Automatic Mode**
5. **Speed Signal Verification & Field Operation**

Commander II Quick Setup-
*****Important Setup Items*****

Step 1

F
Setup & Operation

The Tower 100 Catalyst system will need to have several Calibration entries set by the end user. The Commander II will be shipped with the "EP-E" defaults for PWM Electric Pumps shown on page 28, but the changes shown below and explained on the next pages must be made before use begins with the Tower 100 Catalyst for NutriSphere-N NH3 at a 32 oz/acre rate.

Make these Cal and Special Cal changes before using the system:

Summary of Calibration entries and Special Cal Changes for Tower 100 Catalyst				
Parameter	**CAL or SPEC CAL**	**Default (for EP-E)**	***Setting for Catalyst system***	**More information on page number**
Flow Cal	Cal VOLUME	6000	***355***	24
Section Width	Cal AREA (Turn on Boom 1 to set Boom 1)		***Width in inches for each section***	24
Control Speed	Cal PRESSURE	-2	***-3***	24
Target Rate	Cal RATE	10	***32***	24
Adjust Rate	Cal TANK	1	***Any increment***	24
Fill Tank Size (Opt)	SPEC CAL 1—VOLUME	Off	***Tank Size (gal x 128)***	25
Tank Alarm Set Point	SPEC CAL 1—VOL/MIN	Off	***#GAL x 128***	25
Minimum Flow	SPEC CAL 2—TANK	0	***8.0***	26
Rate Smooth	SPEC CAL 3—RATE	10	***15***	27
PWM Min	SPEC CAL 3—AREA	0	***6***	27
PWM Frequency	SPEC CAL 3—PRESSURE	100	***150***	27

To enter CAL mode, press and hold the CAL button until the red light comes on. To save changes and exit CAL, press and hold the CAL button until the light goes out.

To enter SPECIAL CAL mode. Turn the Commander II OFF. Press and hold the AUTO/MAN and CAL buttons while you turn the Commander II ON. As it starts, it should say SPEC.
The number on the right side of the screen is the SPEC CAL page number.
To move to another page, press the CAL button.
To save changes and exit SPEC CAL, hold the CAL button until the red light goes out.

The Commander II has 3 Volume / Area counters. To see the reading, turn the dial to Volume or Area. To move from one counter to the next, press the + key. To reset a counter, press and hold the reset button for 2 seconds while that counter is visible on the screen.

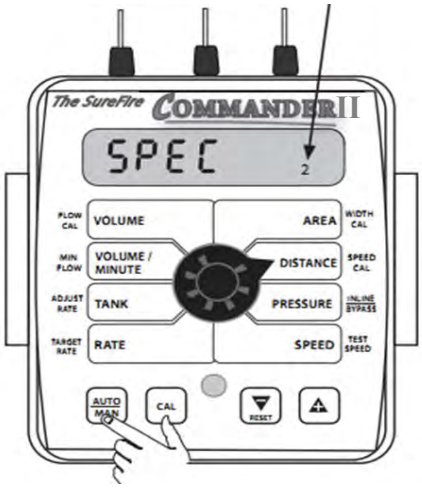

Standard Calibration Procedure:

Step 2

F
Setup & Operation

1. Press CAL key for one (1) second to enter calibration mode.
2. Red light will be on steady and CAL will be displayed in CAL mode.
3. Turn the dial to the items listed below and set as instructed.
4. When complete, press CAL for one (1) second to exit CAL mode. Red light should go out and CAL will not be displayed. **You MUST exit Calibration mode to save your settings.**

FLOW CAL: Enter the calibration number for your **flowmeter** here. On electromagnetic flowmeters the calibration number is from the chart below.
Quick Tip: To quickly change the flow cal, press the AUTO/MAN button to allow you to directly change the 2 left digits (thousands). Then press the UP or DOWN arrow to change the number. Press AUTO/MAN again to change the right 3 digits.

Flow Range (GPM)	Pulses/ Gallon	Commander II Flow CAL (to measure product in ounces)
0.08-1.6	22710	**355**

NOTE: This indicates you are in CAL mode.

WIDTH CAL: Enter the width of each fertilizer or chemical section of your implement. For a single section system, set Section One to the full implement width in inches. For example, for an 8 row 30" implement, set Section One to 240 inches. To set the section widths the Run/Hold Switch has to be in Run and the Section Switch must be ON. If using a single section implement, set Section 2 and 3 to ZERO.

SPEED CAL: Used in calibration mode to enter the speed calibration number in inches per pulse. Default is 0.189 for SureFire Astro GPS speed sensor.

P/F Ratio: Not used at this time.

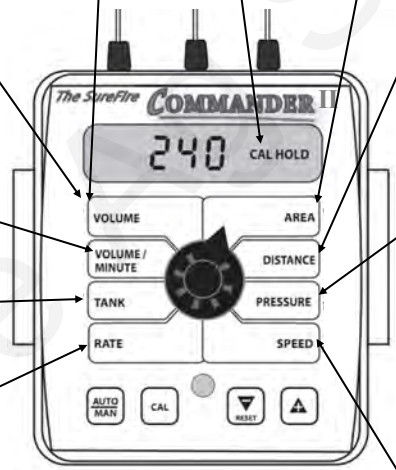

ADJUST RATE: Sets amount of rate change by pressing "+" or "-" button once. Usually set to 2.0. This allows you to change from 32 oz/ac to 34 oz/ac, etc.

TARGET RATE: Set to your intended target rate in Ounces per Acre.

CONTROL SPEED: Start with –3 for Tower 100 Catalyst system.

Allows adjustment of response to "tune" the system for use with fast or slow valves. For example, if response is too slow, use the "+" button to adjust the valve response number to 1, 2 or 3. The range of adjustment is -4 to +3.

TEST SPEED: Use this mode to verify controller automatic operation only AFTER initial operation in MANUAL mode.

You must change these Calibration settings before you begin:
See list on page 23.

Settings for Tower 100 Catalyst system applying NutriSphere-N NH3

355 (to measure ounces)	**FLOW CAL**	**WIDTH**		**Set Boom 1 and Boom 2 as needed** Boom 1: 360 inches Boom 2: 0 Inches Boom 3: 0 Inches
Off	**P/F RATIO**	**SPEED CAL**		0.189
2.0 (or any other increment you may want to use)	**ADJUST RATE**	**CONTROL SPEED**		PWM Electric: **-3**
32 oz/acre	**TARGET RATE**	**TEST SPEED**		Off (will set this speed when doing AUTO test)

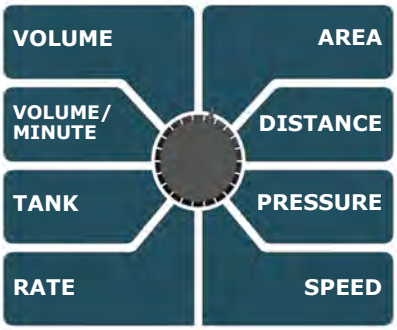

Special Calibration Procedure - Page 1

A few Special Cal Parameters need to be changed for the Tower 100 Catalyst system (see chart on page 23).

To enter Special Cal:

1. Power off Commander II
2. Enter Special Cal by holding both the AUTO/MAN and the CAL button down while turning on the power switch.
3. You should see "SPEC" on the screen, if not, repeat steps one and two.
4. Save changes by holding CAL until red light goes out (about 3 seconds)

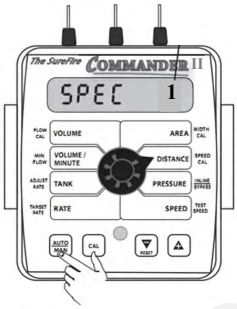

This number tells you which special CAL screen you are on. Pressing the CAL button will change this number.

If you want to use the TANK feature to track how much product is left, use these. (Multiply tank size in gallons x 128 to get tank size in ounces.

FILL TANK SIZE: If using the Tank feature, this setting can be used to enter the volume of the tank. Use the "+" and "-" buttons to choose OFF or any value from 1-65,535. Then when the tank is filled, the tank counter can be reset to full by simply turning the rotary switch to the TANK position and pressing the "+" button.

SET DEFAULTS / COMMANDER II SPECIAL CAL QUICK SETUP: See page titled COMMANDER II SPECIAL CAL QUICK SETUP.

TANK ALARM SET POINT: Use the "+" and "-" buttons to set the level where the Warning LED starts flashing and the word "FILL" flashes on the display. Range is OFF or 1-65,535. When the tank value drops below the set point, the alarms will notify the user that the tank level is low.

Special CAL 1 Settings

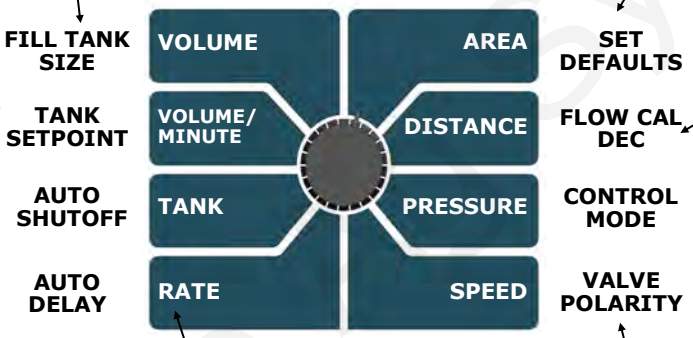

FLOW CAL DEC: Sets the number of decimals available when entering the Flow CAL number in standard calibration mode. Defaults to 1 (Flow cal sets to whole number).

AUTO SHUTOFF ON/OFF: Not used for PWM systems. When Auto Shutoff is enabled (ON) the servo will run toward minimum flow for 4 seconds any time the system is put in HOLD or all booms are turned off, or if in AUTO mode and speed goes to zero. This feature is normally used only in Dry Application systems where the HOLD condition must stop a hydraulic auger or conveyor belt.

AUTO DELAY TIME: Not used for PWM systems.

VALVE POLARITY: Not used for PWM systems.

CONTROL MODE: Allows the selection of either Servo mode or PWM mode. The selection is made based upon your specific equipment. On power up, the mode is displayed briefly as "S Flo" for servo mode and "P Flo" for PWM mode.

Special CAL Page 1 Factory Defaults:

Special CAL 1 Settings

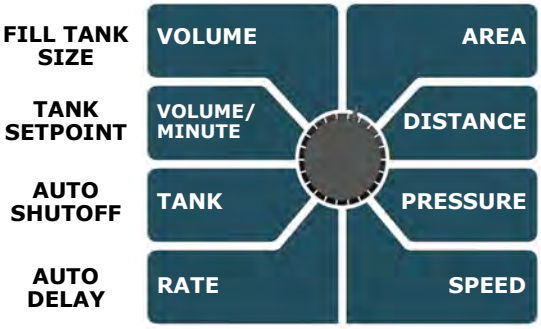

Off	FILL TANK SIZE	EP-E
Off	TANK SETPOINT	1
— — — — —	AUTO SHUTOFF	P-Flo
1	AUTO DELAY	— — — — —

Special Calibration Procedure - Page 2

See chart on page 23 for list of items to change before use. (MIN FLOW on this page)

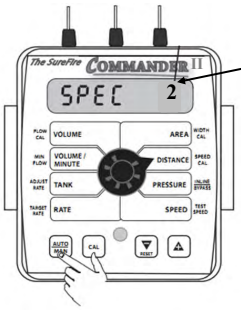

This number tells you which special CAL screen you are on. Pressing the CAL button will change this number.

MIN PRESSURE: Sets the value of the minimum pressure alarm. When the pressure drops below this setting, an alarm will occur. PRESS ALM MIN SPEED can be used to disable alarm when speed drops below MIN SPEED.

MIN PRESSURE ALARM MINIMUM SPEED: This setting is used in conjunction with the MIN PRESSURE setting. It is disabled when MIN PRESSURE is off and sets the MIN SPEED at which the MIN PRESSURE alarm can occur when a setting is present in the MIN PRESSURE location. If MIN PRESSURE is set to 5 PSI and PRESS ALM MIN SPEED is set to 2 MPH, then the alarm will only occur if you are moving faster than 2MPH, otherwise it will be disabled.

MAX PRESSURE: The system alarms if the pressure gets above this setting. This cannot be set higher than the pressure full scale setting.

SPECIAL CAL 2 Settings

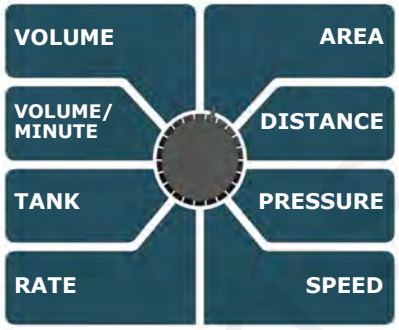

MIN PRESSURE | **MAX PRESSURE**
PRESS ALM MIN SPEED | **MIN PRESS FREQ**
MIN FLOW | **MAX PRESS FREQ**
REMOTE RUN/HOLD | **PRESS FULL SCALE**

MIN PRESSURE FREQ: Set at the factory. Do not change.

MAX PRESSURE FREQ: Set at the factory. Do not change.

MIN FLOW: The purpose of this calibration value is to prevent the system from dropping below the amount that the flowmeter can measure.
Set this to 8.0 oz/min when using the Tower 100 Catalyst system with the 0.08 to 1.6 GPM flowmeter.

REMOTE RUN/HOLD: Set to **rHold** <u>to use a remote hold switch such as the SureFire mercury work switch</u>. Set to **rSpeed** for <u>using a remote speed signal such as a wheel speed sensor on a drill.</u> When set to rSpeed, the normal speed connector on the Commander II will be disabled and only the remote speed connection on the implement will be active.

PRESSURE FULL SCALE: Set this to the maximum reading of the pressure transducer. For all SureFire Systems this is set to **100**.

Special CAL Page 2 Factory Defaults:

Special CAL 2 Settings

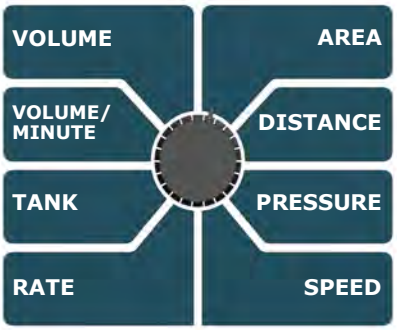

Off	**MIN PRESSURE**	**MAX PRESSURE**	Electric: 50 Hydraulic: 80
————	**PRESSURE ALARM**	**MIN PRESS FREQ**	approx. 200—do not change
Set to 8.0 (oz/min)	**MIN FLOW**	**MAX PRESS FREQ**	approx. 1000-do not change
rHold	**REMOTE RUN/HOLD**	**PRESS FULL SCALE**	100

Special Calibration Procedure - Page 3

See chart on page 23 for list of items to change before use. (Rate Smooth, PWM MIN, PWM FREQ on this page)

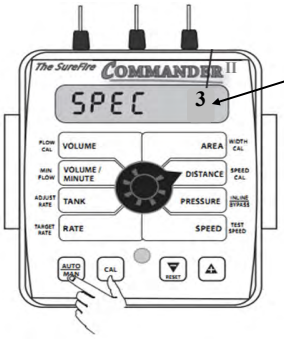

This number tells you which special CAL screen you are on. Pressing the CAL button will change this number.

START TIME & VALVE START %: These settings set how far open the valve will open and how long it will stay at that setting on startup. These settings are only available in PWM mode. If the START TIME parameter is Off, then the VALVE START % will be unavailable. These settings will allow the system to get up and operate at a predetermined speed for a predetermined amount of time. Once the START TIME has been reached, the auto control takes over from that point. This is a very good method of smoothing out startup (switching from hold to run).

PWM MIN %: This setting affects how low the PWM signal can go. If set to 10, then the PWM signal can go down to 10%. If this is set too high, it will keep the system from getting to your lowest rates.

Set to 6 for Tower 100 Catalyst System.

Special CAL 3 Settings

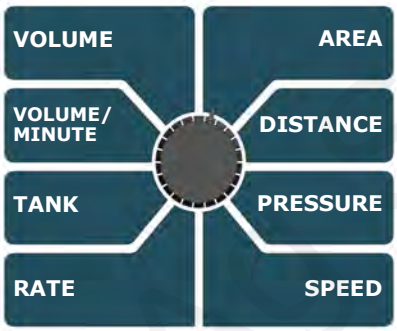

START TIME	**PWM MIN**	
VALVE START%	**PWM MAX**	
————	**PWM FREQ**	
RATE SMOOTH	**————**	

RATE SMOOTHING: This value is used to help the system lock on to the target if all system parameters seem to be functioning appropriately.

Set to 15 for Tower 100 Catalyst system.

PWM FREQ: Default is 100.

Set to 150 for Tower 100 Catalyst system.

PWM MAX %: This setting affects how high the PWM signal can reach. If set to 100, then the PWM signal can reach 100%. If set to 80, then the PWM signal can reach 80%. If a valve is being used that does not have any control after it gets to a certain point, then that point should be your PWM MAX % setting. If this is set too low, it will keep the system from reaching maximum rate.

Special CAL Page 3 Factory Defaults:

Special CAL 3 Settings

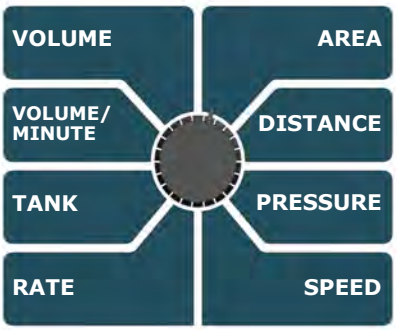

Off	**START TIME**	**PWM MIN**	**Set to 6 for Catalyst**
_ _ _ _ _	**VALVE START%**	**PWM MAX**	100
————	**————**	**PWM FREQ**	**Set to 150**
Set to 15	**RATE SMOOTH**	**————**	————

Complete Table of System Defaults (for Software Revision rP E and later. Earlier Revisions will have different default Flow Cal numbers**.** Software Revision identification displays briefly on console startup.)
The following table shows the unique values that are loaded in the above procedure. The first letter, **E or H** stands for **electric or hydraulic** pumps. The second letter, **P or S**, stands for the type of control used, **PWM or Servo.** Finally, the last letter, **–E or -M** , is for **English or metric** units. Turf utilizes 1,000 square feet for the area measurement.
The Commander II is typically sold with new PWM controlled application systems. However, it is compatible with Servo controlled systems. A special wiring harness is needed for the servo controlled systems.

Load Defaults Selection	PWM Electric Pumps EP-E, EP-M, TURF	PWM Hydraulic Pumps HP-E, HP-M	Servo Electric Pumps ES-E, ES-M	Servo Hydraulic Pumps HS-E, HS-M
Control Rate	-2	-2	-2	-2
Min PWM	0	15	----	----
Max PWM	100	80	----	----
Start Time	Off	1	Off	Off
PWM Start %	----	50	----	----
Flow Cal	**6000**	**4000**	**6000**	**4000**
Control Mode	P-FLO	P-FLO	S-FLO	S-FLO
Max Pressure	50	80	50	80

Initial Operation Instructions

SureFire highly recommends you perform these exact steps with water to verify system is correctly installed and ready for field use.

Note: When testing with water, the system will develop much less pressure than it will have with a heavier, thicker product..

Step 3

Test the system in **MANUAL mode**.

1. Push the AUTO/MAN button until MAN is displayed on the Commander II. You are now in Manual mode.
2. Put the system in RUN. Turn the console switch to RUN or lower the implement if using a mercury Run/ Hold Switch. When HOLD Is not displayed on the screen the system is in RUN.
3. Turn Section 1 switch ON.
4. Open the Air Bleed valve on the Tower. Be prepared to close the valve when water comes out.
5. Turn dial to VOLUME/MINUTE position. Is a number displayed? If so push the "+" button. Does the flow increase? Push the "-" button. Does the flow decrease?
6. If no reading in VOLUME/MINUTE, is the pump turning and is there water present at the pump inlet?
   NOTE: **Feel if pump is vibrating to tell if it is running.**
7. If water is being pumped, but no reading on the Commander VOLUME/MINUTE, check the flowmeter connections and the Flow Cal value.

Proceed to Step 4, ONLY when you can increase and decrease the VOLUME/MINUTE reading using the "+" and "-" keys on the Commander II.

Step 4

Now, we will operate the Commander II in **Test Speed mode.**

1. Enter calibration by pushing and holding the CAL button until CAL is displayed on the Commander II and the red light is on.
2. Push the AUTO/MAN button until AUTO is displayed, indicating you are in automatic mode.
3. Turn the dial to Test Speed in the bottom right corner. Use the + key to adjust to your field operating speed.
4. Turn Run/Hold switch on Commander II to RUN.
5. Turn Run/Hold mercury switch to Run by lowering the implement, unplugging it, or manually tilting the switch.
6. Turn at least Section 1 switch on.
7. You should now be dispensing liquid as if you were traveling through the field at the test speed you entered. *Note: The pressure will be much less with water than it will be with a heavier, thicker product.*

Proceed to the next step when liquid application is verified in AUTO mode with Test Speed operation.

Step 5

Finally, we will verify the Commander II Speed is correct.
Turn the dial to SPEED. Drive the tractor. Does the speed reading seem reasonable and correct? The ASTRO II will be a more accurate speed than an un-calibrated tractor speedometer.

Proceed to the next step when your Commander II Ground Speed is correct.

You are now ready to verify regular field application.

Electric Pumps Won't Run

G
Trouble-shooting

EPD Status Lights

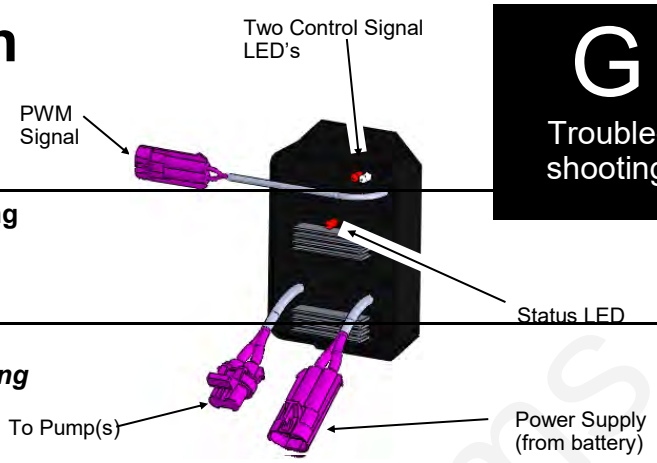

Status LED	Status Description	Troubleshooting Steps
On Steady	***Power input is good and PWM input Signal is detected***	***No Problem, Typical operating condition.***
Steady Blink	***Power input is good and PWM signal is not detected***	***Typical 'Off' Condition. If pumps should be on:*** ***1. Inspect wiring and connectors*** ***2. Check voltage at PWM connector to EPD, should be 1-12 volts to turn on.*** ***3. Check voltage on PWM wires on back of Commander II console (top cable (10 pin connector—Pins D & E—yellow and green wire).***
Blink once, pause, blink once, pause	Open circuit between motor output and motor.	Check harness and connectors to motor. If using two motors, plug each in separately directly to EPD (bypassing Y-harness)
Blink twice, pause, blink twice, pause	Output short circuit detected.	• Check motor wiring
Three blinks, pause, three blinks, pause	Overcurrent condition	• Check total load • Clean cooling fins on EPD
Four blinks, pause, four blinks, pause	***Input power fault. Low voltage condition in power to EPD.***	***Unplug battery power from EPD to reset. Check power cables and connections for quality.*** ***Be certain that power cable connects directly to battery and has a solid, clean connection.***
Five blinks, pause	Input frequency out of range.	Check PWM Settings on Rate Controller.
Control Signal LEDs		
Light intensity varies	***Off - No PWM Signal*** ***100% brightness - Maximum PWM input signal***	

Electric pumps will not turn on

Connect pumps directly to battery

1. Find the EPD (electric pump driver) shown above. Connect the two large connectors to each other (bypass the module and supply 12 volts directly to pump)
2. Does the pump run? If not, check the 40 amp fuse in the EPD harness near the tractor battery. Inspect harnesses and connections.

Electric pumps only run with 12 volts direct from battery

1. Connect pumps and power harness back to EPD.
2. Push Auto/Man button to enter Manual mode.
3. Turn on section 1 and run/hold switch. Turn dial to Volume/Minute and push '+' button a few times.
4. Remove PWM valve connector at EPD and check voltage. You will need 1-12 volts to turn pumps on.
5. Push '-' button, voltage should decrease, push '+' button voltage should increase.
6. If 1-12 volts is not present and it will not increase and decrease, inspect wiring harnesses and connectors. See schematics in section D to test PWM signal directly at 10 pin connector on back of Commander II

Section Valve(s) will not move

1. Check the harness connection to that valve. It is a 3-Pin Weather Pack connector. See Section D for wiring diagrams

Pin	Function
A	+ 12 V Constant
B	Ground
C	+ 12 V Signal

2. Check voltage pin A to Pin B. Must be 12 volts, if not, go back to 10-pin on Commander II and check voltage (pins J & K, white and black wire).
3. If voltage is present on pins A&B of 3-pin connection to valve, then check pin C to Pin B. This should be 12 volts when the valve is commanded on or open, this should be zero volts when valve is off or closed.
4. If signal voltage is not present to open valve, use diagrams to check at the 10-pin connector on back of Commander II.
5. If constant voltage (Pins A&B) and switched voltage (Pins C&B) are present, inspect, repair or replace the valve.

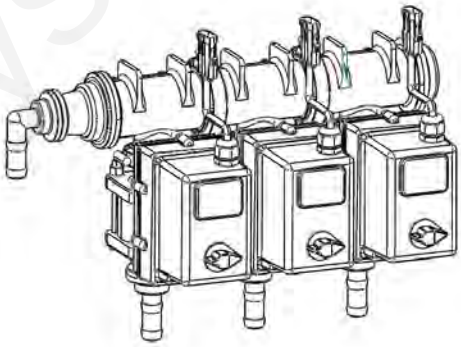

Console is Erratic in Operation

- If you have a **two-way radio**, it may be mounted too close to the console. Keep all cables away from the radio, its antenna and power cable.
- **Ignition wires** may be causing the console to malfunction. Keep cables away from ignition wires or install ignition suppressor.
- Reroute all cables away from **electric solenoids, air conditioning clutches** and similar equipment.

Console Appears Dead

- Using your voltmeter, check for 12 volts at Commander power connector. Check for damaged power cable or reversed terminals. Check fuse in power cable and any other fuses or circuit breakers in path. Inspect connections to Commander II power switch.

Commander II Error Messages

Message	Description
Lo P	Low Power to Commander II, check all power and ground connections
no SPEEd	Will flash in display if dial is in RATE position and there is no speed signal regardless of all other conditions. Check speed sensor and connections. (When vehicle is not moving, this is a normal condition)
no FLo	Will flash in display if rotary switch is in Rate position and should have flow (In Run, some sections on, speed greater than zero) but no flow is detected. Check flowmeter and flow harness connections.
no FLo StoP	Pumps will stop and this message will be displayed if no FLo condition continues for 60 seconds. Console Power must be cycled to reset this condition. Check flowmeter and connections. Use Manual mode for priming and plumbing troubleshooting to avoid this error.
no boom	Will flash in display if dial is in Width position in Cal mode and no sections are turned on.
FILL	Will flash in display if tank level is equal to or less than tank set point. Adjust these settings in Special Calibration.
SPEC	Appears when entering Special Calibration mode
CLEAr	Alerts user that the currently selected counter will be reset to zero if RESET button is held for 2 seconds.
OFL	Displayed when a DISTANCE, AREA or VOLUME counter has overflowed their maximum value. Hold RESET button for 2 seconds to reset the counter.

Application Rate & Flow Troubleshooting

Application Rate Fluctuates

First, you need to determine if the fluctuation is caused by the controller sending fluctuating signals to the valve.

1. **Inspect & clean pump inlet strainer.** Strange flow rate fluctuations are very often due to an obstruction to the pump inlet. Inspect plumbing from tank to pump.

OR

1. Go to **Manual Mode** and turn system on.
2. Turn dial to VOLUME/MINUTE position. Use the +/- buttons to get to a flow similar to field operation.
3. If there is a large fluctuation in flow on the Commander II, visually observe the liquid flow. Is the discharge a steady stream; are the flow indicator balls floating steady?
4. If visually the flow is steady, but the display reports a fluctuation in GPM, inspect the flowmeter. See section B for flowmeter information.
5. If visually the flow is unsteady, the flowmeter is working correctly reporting a flow problem. Is the pump turning steady or surging?
6. Look for any type of obstruction in the pump inlet. Clean the strainer. If continually plugging the strainer, investigate fertilizer quality and necessary strainer size.
7. Look for air bubbles in the flow. These can be seen in the flow indicators. Air bubbles indicate an air leak on the pump inlet allowing the pump inlet to suck some air.

Application Rate fluctuates in field, but flow in Manual mode is stable.

1. Turn dial to SPEED. Look for any wild fluctuations in speed indicating a sensor problem.
2. Change the Valve Control Speed in Cal Mode by reducing the value (range is –4 to +3).

Application Rate is slow to get to the Target Rate

1. You may need to increase the Control Speed in Cal mode (range is –4 to +3) if system is slow in returning to Target Rate when speed changes.
2. If slow getting to target when starting, increase PWM minimum on Special Cal page 3. (Be aware that this will prevent the pump from slowing down below this and may cause inability to hit low rates.)
3. Increase the Valve Start %, see Special Cal page 3.

No Flow shown on Commander II but liquid is being pumped

1. Unplug flowmeter. With voltmeter, check for 12 volts between pins B&C of flowmeter connector (on main harness PN 18220). If 12 volts not present, inspect wiring harness and troubleshoot all connections per schematic (see Section D).
2. If 12 volts is present, then ***conduct a tap test***. Enter CAL mode and change the flow cal to 10. Have a second person watch VOLUME/MINUTE while other person taps (use a short piece of wire or a paper clip) between pins A&C of flowmeter connector (on 18220 harness). A flow value should show up indicating the wiring is not damaged.
   - If working alone, you can set dial to VOLUME and reset a counter to zero. Then tap approximately 20 times and see if the Commander II volume counter has changed.
3. If Commander II responded to the tap test, your wiring to that point is good. If still not fixed, inspect adapter harness and test continuity per schematic (see Section D)
4. Replace flowmeter.

Flowmeter is inaccurate

This procedure is used to verify and fine-tune the flowmeter calibration. With Electromagnetic flowmeters, it should not be necessary to change the Flow Cal. However, **SureFire recommends always running a catch test to verify accuracy and that Commander II is setup correctly.**

PROCEDURE

1. Put enough water in the tank to perform this test. **(The larger the volume of water used, the more accurate the calibration will be).**
2. Start pump and turn on sections. Run enough water to purge all air from lines. Turn off pump.
3. Turn console rotary selector to the VOLUME position. Select the counter (1-3) that you want to use. Press and hold the RESET button until the display reads 0 **(about 2 seconds).**
4. Turn on all sections, and run a known amount of water.
5. Turn off all sections. Compare the console's VOLUME reading with the known amount of water run. If the two amounts are within one or two percent, no fine tuning is required. If the two amounts are more than two or three percent different, continue with the next step.
6. With the console still in the VOLUME position, enter calibration **(Boom switches OFF, hold the CAL button until red warning light comes on; about one second).** The display will show the flowmeter calibration value and the CAL icon.
7. Momentarily press the CAL button. The CAL icon will begin to flash and the total volume will be displayed.
8. When the TOTAL FLOW value is displayed, use the "+" or button to adjust the value to match the amount of water run.
9. Momentarily press the CAL button. The word CAL and the flowmeter calibration number will be displayed. You will notice that the flowmeter calibration value has changed. Write down the new flowmeter calibration value. This is your "fine tuned" calibration value, keep it for future reference.
10. Exit calibration by holding the "CAL" button until the red warning light goes out (about one second).

NOTE: **The most accurate method to measure the volume of water run is to place a container under every nozzle** and add together the amount from each nozzle. This assures that 100 percent of the water is collected and that all rows are equal. At a minimum collect water from 4 - 6 rows. **NEVER base a calibration on a single row catch.** It is important to perform this procedure at a flow rate similar to that which will be used in the field.

Speed is inaccurate

This procedure is used to drive a known distance and find the Speed Cal for your setup. The Astro GPS Speed Sensor Cal should be 0.189 and should not need to be changed.

1. With the console turned ON, place the Run/Hold switch in the HOLD position. The HOLD icon will be displayed. Turn the rotary dial to the “DISTANCE” position. Be sure the display shows 0. If not, reset the distance counter by pressing and holding “RESET” until the display returns to 0 (approximately one second).
2. Place the Run/Hold switch in RUN when the vehicle passes the starting flag to activate the distance counting function. The console display numbers will increase, adding to the distance total as you drive. Drive the pre-measured course and place the Run/Hold switch in HOLD, when the vehicle passes the ending flag, to stop the distance counting function. The console display should read “HOLD”. **Stop the vehicle in a level and safe area** and continue with this procedure.
3. With the rotary dial still at DISTANCE (SPEED CAL), press and hold the “CAL” key for one second. Once the console is in “CAL,” CAL and the speed calibration value will be displayed. Momentarily press CAL and the word CAL will begin to flash and the distance travelled will be displayed.
4. When the display shows distance (“CAL” is flashing), verify whether the number displayed is the exact distance you drove (within +/- 1 - 2 %). If not, press the “+” or “-” key to adjust the figure to match the distance you actually drove. If the display reads too high, use the “-” key to lower the displayed value. If the display reads too low, use the “+” key to raise the displayed value.
5. When the number shown on the display matches (as closely as possible) the actual distance driven, you have arrived at the correct Speed Cal. You may check the calibration number by momentarily pressing CAL. The word CAL and the SPEED CAL number will appear. Exit “CAL” by pressing “CAL” for one second.

I want to match Commander II speed to Tractor Speed

Use the equation below to calculate a new Speed Cal to enter in Cal mode. The Astro GPS Speed Sensor Cal should be 0.189 and should not need to be changed.

Hint: If you change the Commander II Speed Cal to 1.0 first, it makes the math very easy.

New Speed Cal = Old Speed Cal x Tractor Speed ÷ Commander II Speed

Row Flow and Pump Output Chart

	Flow Information at 32 oz/acre rate and 30” row spacing								
		Pump Output (gal/min and oz/min)							
MPH	Oz/min/ row	20’ GPM	20’ OPM	30’ GPM	30’ OPM	40’ GPM	40’ OPM	60’ GPM	60’ OPM
4	.65	**.04**	**5.2**	**.06**	**7.8**	.08	10.4	.12	15.6
5	.81	**.05**	**6.5**	.08	9.7	.10	13	.15	19.4
6	.97	**.06**	**7.8**	.09	11.6	.12	15.5	.18	23.2
7	1.13	**.07**	**9.0**	.11	13.6	.14	18.1	.21	27.2
8	1.29	.08	10.3	.12	15.5	.16	20.6	.24	31.0
9	1.45	.09	11.6	.14	17.4	.18	23.2	.27	34.8
10	1.62	.10	13.0	.15	19.4	.20	25.9	.30	38.8
		Below flowmeter rated range							

Recommended Care and Maintenance

Winterization

SureFire recommends flushing your pump and complete system with adequate amounts of water first. Next, use RV antifreeze to winterize your system by pumping an adequate amount through all components. At the beginning of the next season, begin with water to verify the system is in working order with no leaks.

Inspect Electric Pumps

The electric pump and motor is a completely sealed component. Over time the electric motor will lose efficiency. The entire pump and motor will need replaced when it won't efficiently produce the flow required.

Pre-season Service

1. Fill system with water and run in Manual mode to verify components and system are in working order.
2. Tighten all clamps. Loose clamps may be evident by leaks on the output side of the system. Loose clamps from the tank to the pump are not always apparent, but can be sources of air getting into the system which can create issues.
3. Remove the black cap from the top of each check valve. Check the diaphragm to be sure it is intact and not gummed up with residue. Look under the diaphragm for debris. Compress the spring in the cap to be sure it moves freely. Carefully replace diaphragm and tighten cap.
4. Be sure all rows are flowing and that all metering tubes are open. (Note: It will take a higher flow rate with water to create enough pressure to open all the check valves.)
5. Run the system in AUTO Test Speed Mode to verify that system will lock on to a Target Rate.

SureFire's Torpedo™ NH3 Systems are a "one-stop-shop" for all components needed to get Anhydrous Ammonia from the tank to the soil. SureFire will work with you to ensure all necessary components are supplied as part of the complete kit.

SureFire Ag Systems 9904 Hwy 25 Atwood, KS 67730
www.surefireag.com

396-3076Y1 QuickStart Card

SureFire Catalyst™ Electric Pump System for NutriSphere-N® NH3 & Commander II

Note: When applying NutriSphere-N NH3, the flowmeter will be set to measure ounces. All screens that say gallons or gal/acre will actually be showing ounces, not gallons.
The settings shown here are typically good settings to begin with. Actual settings on your system may vary from those shown here. Adjust settings as necessary in the field to get the best operation from your system.

For screenshots and more complete system information and explanation, see the full manual for this system.
Plumbing detail shown below: Picture on left shows plumbing on bottom of product tank.

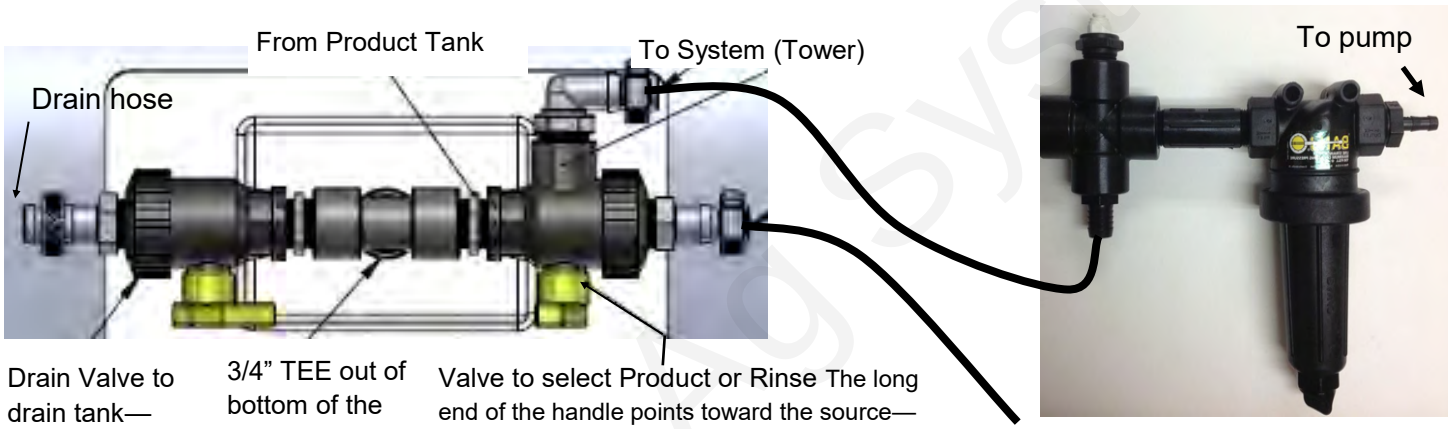

Drain Valve to drain tank—1/4 turn valve to open or close drain

3/4" TEE out of bottom of the Product Tank

Valve to select Product or Rinse The long end of the handle points toward the source—product tank or rinse tank. Rotate valve 1/2 turn to change from tank to rinse. Rotate valve 1/4 turn to close flow from both the product tank and the rinse tank.

Hose from rinse tank—Use the rinse tank to rinse the system when it will not be used for a few days.

With the controller on, to enter CAL mode, press and hold the CAL button until the red light comes on. To save changes and exit CAL, press and hold the CAL button until the light goes out.
To enter SPECIAL CAL mode. Turn the Commander II OFF. Press and hold the AUTO/MAN and CAL buttons while you turn the Commander II ON. As it starts, the screen should read SPEC.
The number on the right side of the screen is the SPEC CAL page number.
To move to another page, press the CAL button.
To save changes and exit SPEC CAL, hold the CAL button until the red light goes out.

The Commander II has 3 Volume / Area counters. To see the reading, turn the dial to Volume or Area. To move from one counter to the next, press the + key. To reset a counter, press and hold the reset button for 2 seconds while that counter is visible on the screen.

Most applications at 32 oz/ac and 30" rows will use the Purple tube.

For cold weather and/or high speed application, if the pressure generally runs over 40-45 PSI in the purple tube, consider switching to the Blue tube.

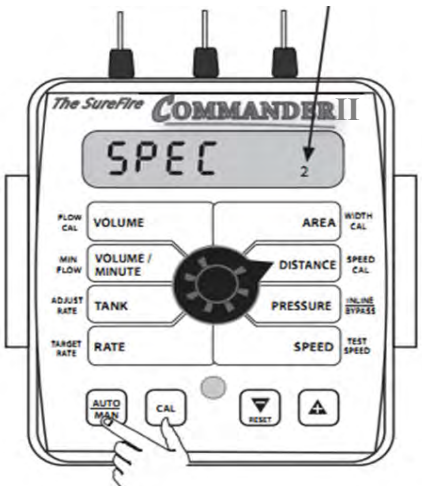

Make these Cal and Special Cal changes before using the system:

Summary of Calibration entries and Special Cal Changes for Tower 100 Catalyst				
Parameter	**CAL or SPEC CAL**	**Default (for EP-E)**	**Setting for Catalyst system**	**More information on page number**
Flow Cal	Cal VOLUME	6000	***355***	24
Section Width	Cal AREA (Turn on Boom 1 to set Boom 1)		***Width in inches for each section***	24
Control Speed	Cal PRESSURE	-2	***-3***	24
Target Rate	Cal RATE	10	***32***	24
Adjust Rate	Cal TANK	1	***Any increment***	24
Fill Tank Size (Optional)	SPEC CAL 1—VOLUME	Off	***Tank Size (gal x 128)***	25
Tank Alarm Set Point	SPEC CAL 1—VOL/MIN	Off	***#GAL x 128*** *(Optional)*	25
Minimum Flow	SPEC CAL 2—TANK	0	***8.0***	26
Rate Smooth	SPEC CAL 3—RATE	10	***15***	27
PWM Min	SPEC CAL 3—AREA	0	***6***	27
PWM Frequency	SPEC CAL 3—PRESSURE	100	***150***	27

With the Flow Cal set as shown above, the Commander II will measure the product in ounces, not gallons.

To run the system in **MANUAL mode** (can be used to prime the pump and to rinse the system or for testing)

1. Push the AUTO/MAN button until MAN is displayed on the Commander II. You are now in Manual mode.
2. Put the system in RUN. Turn the console switch to RUN or lower the implement if using a mercury Run/Hold Switch. When HOLD Is not displayed on the screen the system is in RUN.
3. Turn Section 1 switch ON.
4. Open the Air Bleed valve on the Tower. Be prepared to close the valve when water comes out.
5. Turn dial to VOLUME/MINUTE position. Push the "+" button to increase pump speed. Push the "-" button to decrease pump speed.

To operate the Commander II in **Test Speed mode.**

1. Enter calibration mode by pushing and holding the CAL button until CAL is displayed on the Commander II and the red light is on.
2. Push the AUTO/MAN button until AUTO is displayed, indicating you are in automatic mode.
3. Turn the dial to Test Speed in the bottom right corner. Use the + key to adjust to your field operating speed.
4. Turn Run/Hold switch on Commander II to RUN.
5. Turn Run/Hold mercury switch to Run by lowering the implement, unplugging it, or manually tilting the switch.
6. Turn at least Section 1 switch on.
7. Turn the dial to Rate to verify that it is locking on to the Target Rate.
8. You should now be dispensing liquid as if you were traveling through the field at the test speed you entered. *Note: The pressure will be much less with water than it will be with a heavier, thicker product.*